Quad-Ring®

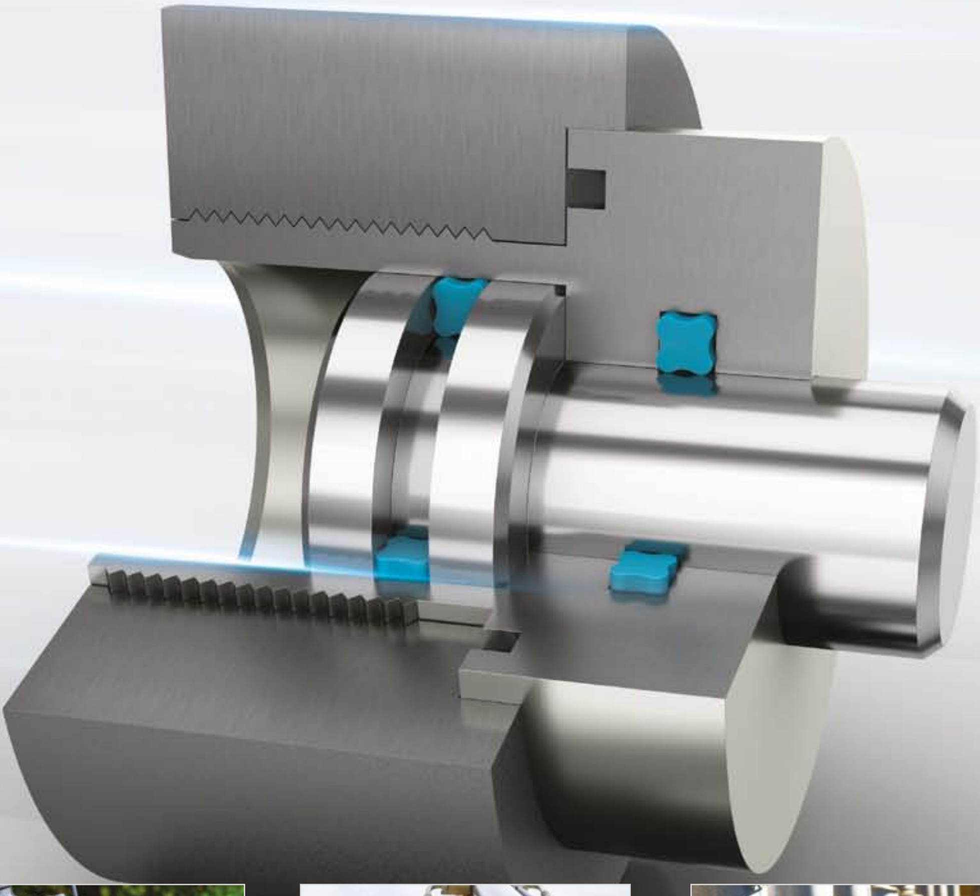

YOUR PARTNER FOR SEALING TECHNOLOGY

TRELLEBORG

Your Partner for Sealing Technology

Trelleborg Sealing Solutions is a major international developer, manufacturer and supplier of seals, bearings and molded components in polymers. We are uniquely placed to offer dedicated design and development from our market-leading product and material portfolio: a one-stop-shop providing the best in elastomer, silicone, thermoplastic, PTFE and composite technologies for applications in aerospace, industrial and automotive industries.

With 50 years of experience, Trelleborg Sealing Solutions engineers support customers with design, prototyping, production, test and installation using state-of-the-art design tools. An international network of over 80 facilities worldwide includes over 20 manufacturing sites, strategically-positioned research and development centers, including materials and development laboratories and locations specializing in design and applications.

Developing and formulating materials in-house, we utilize the resource of our material database, including over 2,000 proprietary compounds and a range of unique products. Trelleborg Sealing Solutions fulfills challenging service requirements, supplying standard parts in volume or a single custom-manufactured component, through our integrated logistical support, which effectively delivers over 40,000 sealing products to customers worldwide.

Trelleborg Sealing Solutions facilities are certified according to current market-related quality standards. In addition to the established ISO 9001 standard, our facilities are certified to environmental, health and safety standards, as well as specific customer specifications. These certifications are in many cases prerequisites, allowing us to comply to all market segment requirements.

ISO 9001

The information in this catalog is intended for general reference only and not for specific applications. Application limits for pressure, temperature, speed and media are maximum values determined in laboratory conditions. In application, due to operating parameters, maximum values may not be achievable. Customers must satisfy themselves of a product and material's suitability for their individual applications. Any reliance on information is therefore at the user's own risk. In no event will Trelleborg Sealing Solutions be liable for any loss, damage, claim or expense directly or indirectly arising or resulting from the use of any information provided in this catalog. While every effort is made to ensure the accuracy of information contained herewith, Trelleborg Sealing Solutions cannot warrant the accuracy or completeness of information.

Contact your local Customer Solution Center to obtain the best recommendation for a specific application from Trelleborg Sealing Solutions.
This edition supersedes all previous catalogs. This catalog or any part of it may not be reproduced without permission.

® Quad-Ring® is a registered trademark of Minnesota Rubber and Plastics, Quadion LLC, used under license.
All other trademarks are the property of Trelleborg Group. The turquoise color is a registered trademark of Trelleborg Group. © 2021, Trelleborg Group. All rights reserved.

Contents

4 Description

5 Applications

6 Materials

6 Characteristics and Inspection of Elastomers

8 Design Instructions

12 Surface Finishing

12 Installation Instructions

13 Installation Recommendations

25 General Quality Criteria

25 Guidelines for the Storage of Polymer Products Based on ISO 2230

32 Conversion Tables

Description

Original Quad-Ring® * are four lipped seals with a specially developed sealing profile.

A wide range of elastomer materials for both standard and special applications allows practically any liquid and gaseous media to be sealed.

Quad-Ring® are vulcanized as a continuous ring. They are characterized by their annular form with a four lipped profile. Their dimensions are specified with the inside diameter d_1 and the Cross-Section W (Figure 1).

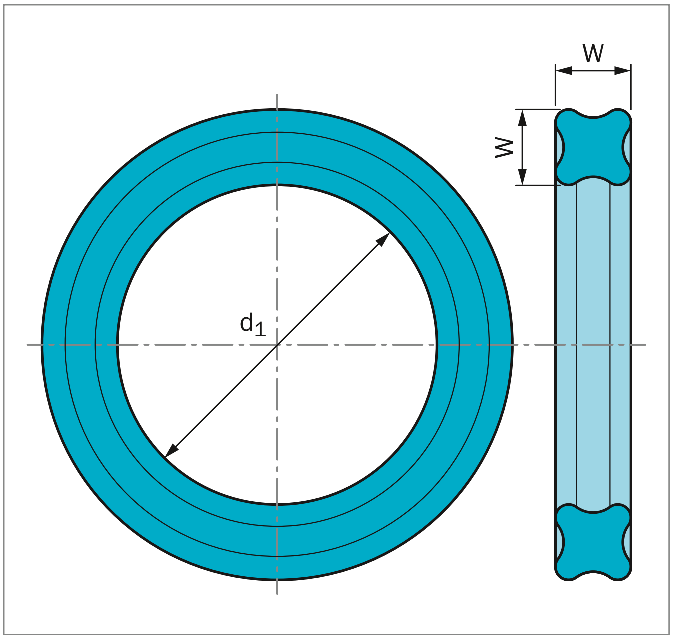

Figure 1: Quad-Ring® dimensioning

Quad-Ring® are supplied in accordance with American O-Ring Standard AS568.

ADVANTAGES

In contrast to the O-Ring, Quad-Ring® has the following advantages:

- Avoids twisting in the groove. Due to its special profile, the seal does not tend to roll in the groove during reciprocating movement
- Low friction
- Very good sealing efficiency. Due to an improved pressure profile over the cross-section, a high sealing effect is achieved
- A lubricant reservoir formed between the sealing lips improves start up
- Unlike an O-Ring, the mold line flash lies in the trough, between and away from the critical sealing lips

METHOD OF OPERATION

Quad-Ring® are self energizing double-acting sealing elements. The forces acting in a radial or axial direction due to the installation give Quad-Ring® its initial leak-tightness (initial squeeze). These forces are superimposed by the system pressure.

An overall sealing force is created that increases with increasing system pressure (Figure 2). Under pressure, the seal behaves in a similar way to a fluid with high viscosity and the pressure is transmitted uniformly to all sides.

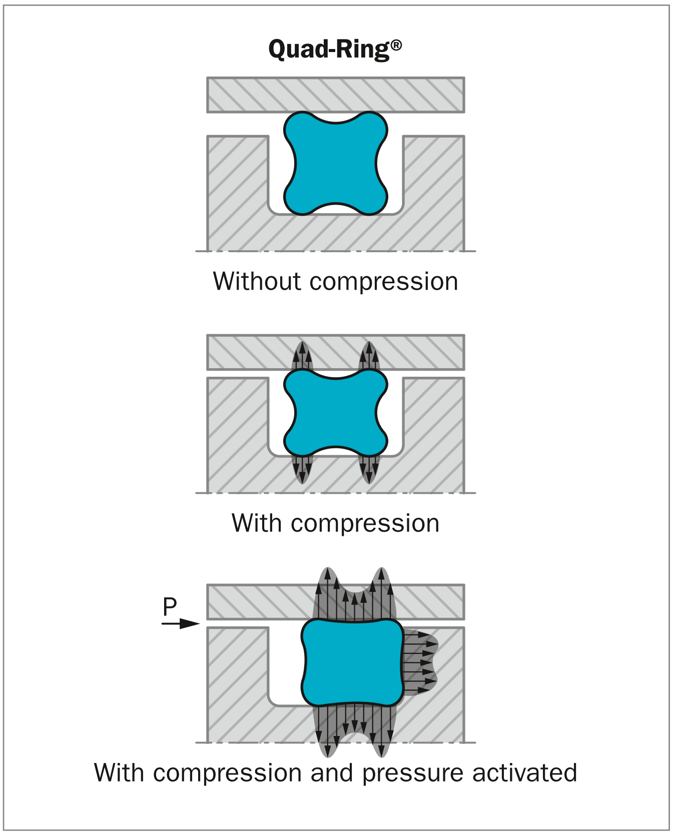

Figure 2: Quad-Ring® squeeze with and without system pressure

---

* Quad-Ring® is a registered trademark of Minnesota Rubber and Plastics, Quadion LLC, used under license.

■ Applications

FIELDS OF APPLICATION

Quad-Ring® can be used for a wide range of different applications. It is used predominantly for dynamic sealing functions. Its use is always limited by the pressure to be sealed and the velocity.

Dynamic applications:

- For sealing of reciprocating pistons, rods, plungers, etc.
- For sealing oscillating, rotating or spiral movements on shafts, spindles, rotary transmission leadthroughs, etc.

Static applications:

- As a radial-static seal, e.g. for bushings, covers, pipes, etc.
- As an axial-static seal, e.g. for flanges, plates, caps, etc.
- As an energizer element for elastomer energized hydraulic seals where there is a risk of the O-Ring twisting.

QUAD-RING® FOR ROTARY APPLICATIONS

In applications with small cyclic periods of activity, Quad-Ring® can also be used for sealing rotating shafts. The following points according to the rotary seal principle should be observed:

The rotary seal principle is based on the fact that an elongated elastomer ring contracts when heated (Joule effect). With the normal design criteria, the seal ring inside diameter d_1 will be slightly smaller than the shaft diameter, and the heat generated by friction would cause the ring to contract even more. This results in a higher pressure on the rotating shaft so that a lubricating film is prevented from forming under the seal and even higher friction occurs. The result would be increased wear and a premature failure of the seal.

Using the rotary seal principle, this is prevented by the seal ring being selected so that its inside diameter is approximately 2 to 5% larger than the shaft diameter to be sealed. The installation in the groove means that the seal ring is compressed radially and is pressed against the shaft by the groove diameter. The seal ring is thus slightly corrugated in the groove, a fact which helps to improve the lubrication.

The rotary seal principle can be neglected at peripheral speeds of less than 0.5 m/s.

When using the Quad-Ring® as a rotary seal, the use of a suitable surface coating is recommended. Please note the information given in our Seal-Glide® brochure or contact your local Customer Solutions Center for further details.

TECHNICAL DATA

Quad-Ring® can be used for a wide range of applications. The choice of a suitable material is determined by the temperature, pressure and media. In order to assess the suitability of Quad-Ring® as a sealing element for a given application, the interaction of all the operating parameters have to be taken into consideration.

Working pressure, dynamic application:

Reciprocating
up to 5 MPa (50 bar) without Back-up Ring
up to 30 MPa (300 bar) with Back-up Ring

Rotating
up to 1 MPa (10 bar) without Back-up Ring
up to 3 MPa (30 bar) with Back-up Ring

Working pressure, static application:
up to 5 MPa (50 bar) without Back-up Ring
up to 40 MPa (400 bar) with Back-up Ring

Please note the permissible extrusion gaps, see Table 4.

Speed:

Reciprocating:		up to 0.5 m/s
Rotating:	briefly	up to 2.0 m/s

Operating temperature range:
depending on material and media resistance, for:

General applications, NBR:	-30 °C to + 100 °C
General applications, FKM:	-18 °C to + 200 °C

When assessing the application criteria, the transient peak and continuous operating temperature and the cyclic duration factor must be taken into consideration. For rotating applications, the increases in temperature due to frictional heat must also be taken into account.

Media:
Trelleborg Sealing Solutions offers a range of materials to seal against practically all liquids, gases and chemicals. Please note when selecting the material for your application, refer to our material selection tools such as our Chemical Compatibility Guide.

Materials

The available standard elastomer materials are shown in Table 1.

If no particular specifications are given for the material, NBR (Nitrile Butadiene Rubber) in 70 Shore A will be supplied.

Table 1: Standard materials for Quad-Ring®

Material-Type	NBR Nitrile Butadiene Rubber	FKM Fluorocarbon Rubber
Material code	N7004	V7002
Hardness Shore A (±5)	70	70
Color	Black	Black
Operating temperature range (°C)	-30 °C to +100 °C	-18 °C to +200 °C
Description	Standard material for hydraulics and pneumatics. Mineral oil-based hydraulic fluids, animal and vegetable oils and fats, aliphatic hydrocarbons, silicone oils and greases, water up to +80 °C	Mineral oils and greases, flame retardant liquids, aliphatic, aromatic and chlorinated hydrocarbons, petrol, 99 octane petrol, diesel fuels, silicone oils and greases

Other materials and specialized compounds are available on request.

When used in a real-world setting, conditions and media may vary, affecting material properties or operating temperature ranges. In application testing should be carried out to verify performance.

Characteristics and Inspection of Elastomers

HARDNESS

One of the most frequently named properties regarding polymer materials is hardness. Even so, the values can be quite misleading.

Hardness is the resistance of a body against penetration of an even harder body of a standard shape at a defined pressure.

There are two procedures for hardness tests regarding test samples and finished parts made out of elastomer materials:

1. Shore A / D in accordance with ISO 868 / ISO 7619-1 / ASTM D 2240 - Measurement for test samples
2. Durometer IRHD (International Rubber Hardness Degree) in accordance with ISO 48 / ASTM 1414 and 1415 - Measurement of test samples and finished parts

The hardness scale has a range of 0 (softest) to 100 (hardest). The measured values depend on the elastic qualities of the elastomers, especially on the tensile strength.

The test should be carried out at temperatures of 23 ±2 °C (73.4 ±2 °F) - no earlier than 16 hours after the last vulcanization process. If other temperatures are being used, this should be mentioned in the test report.

Tests should only be carried out with samples that have not been previously stressed mechanically.

HARDNESS TESTS IN ACCORDANCE WITH SHORE A/D

The hardness test device for Shore A (indentor with pyramid base) is a sensible choice for hardness range 10 to 90. Samples with a larger hardness should be tested with the Shore D device (indentor with spike).

Test specimen:
Diameter min. 30 mm (1.181 inch)
Thickness min. 6 mm (0.240 inch)
Upper and lower sides smooth and flat

When thin material is being tested, it can be layered to ensure a minimum sample thickness is achieved, up to a maximum of 3 layers. All layers must be at minimum 2 mm (0.080 inch) thick.

The measurement is done at five different places at a defined distance and time.

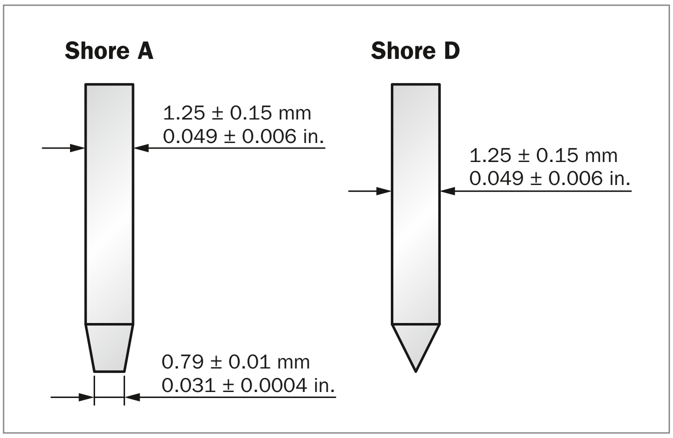
Shore A
Shore D
1.25 ± 0.15 mm
0.049 ± 0.006 in.
1.25 ± 0.15 mm
0.049 ± 0.006 in.
0.79 ± 0.01 mm
0.031 ± 0.0004 in.

Figure 3: Indentor in accordance with Shore A / D

HARDNESS TEST ACCORDING TO IRHD

The test of the Durometer in accordance with IRHD is used with test samples as well as with finished products.

The thickness of the test material has to be adjusted according to the range of hardness. In accordance with ISO 48, there are two hardness ranges:

Soft: 10 to 35 IRHD ⇒ Sample thickness
10 to 15 mm (0.394 to 0.591 inch)
procedure "L"
Normal: over 35 IRHD ⇒ Sample thickness
8 to 10 mm (0.315 to 0.394 inch)
procedure "N"
Sample thickness
1.5 to 2.5 mm (0.059 to 0.098 inch)
procedure "M"

The hardness determined with finished parts or samples can vary from those determined from specimen samples, especially those with a curved surface.

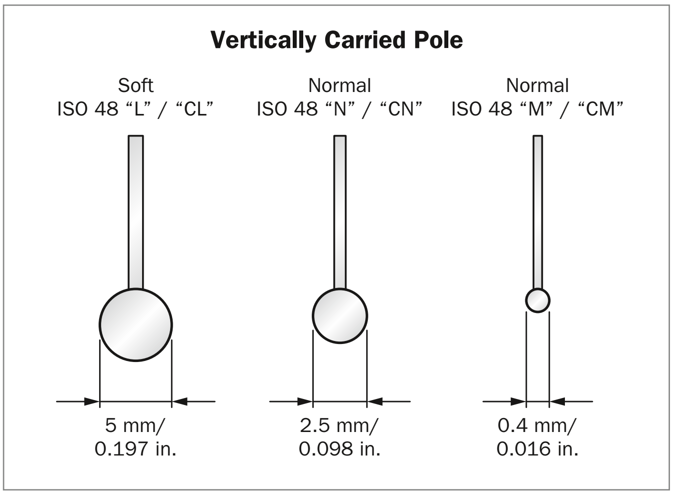
Vertically Carried Pole
Soft
ISO 48 "L" / "CL"
Normal
ISO 48 "N" / "CN"
Normal
ISO 48 "M" / "CM"
5 mm/
0.197 in.
2.5 mm/
0.098 in.
0.4 mm/
0.016 in.

Figure 4: Indentor in accordance with IRHD

INFLUENCING PARAMETERS ON THE HARDNESS TEST FOR POLYMER MATERIALS

Various sample thicknesses and geometries, as well as different tests, can show different hardness values even though the same materials have been used.

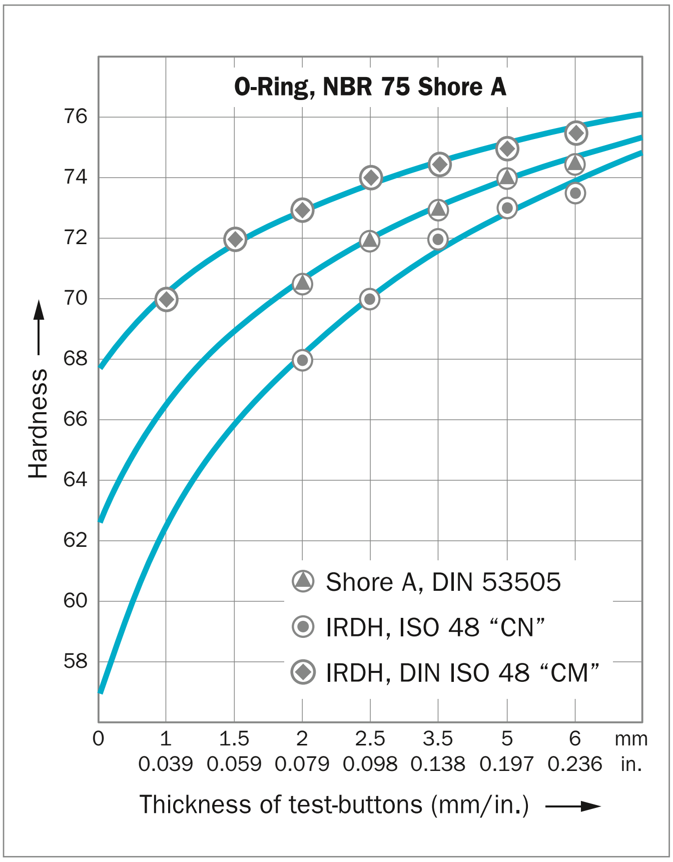

Figure 5: Ranges of hardness depending on sample thickness and test method

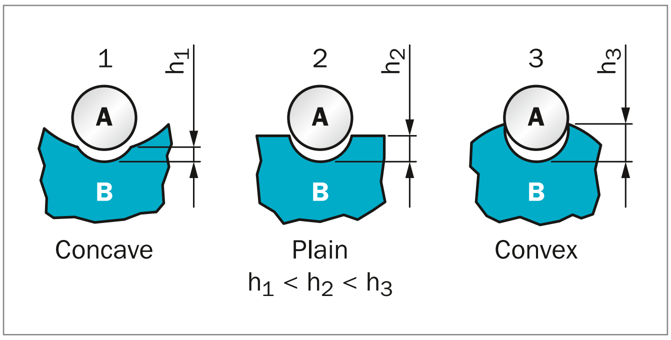
1
2
3
h_1
h_2
h_3
A
A
A
B
B
B
Concave
Plain
Convex
$h_1 < h_2 < h_3$

Figure 6: Range of hardness depending on surface geometry for the equivalent material characteristics

With equivalent material characteristics of the elastomer sample 3, the indentor penetrates the deepest at the surface (Figure 6) and therefore establishes the softest area.

As the convex geometry has a stronger effect on smaller width O-Rings, the tolerances on hardness for widths under 2.0 mm (0.079 inch) should be increased up to +5 / -8 IRHD based on the valid IRHD nominal value.

Compression set

An important parameter regarding the sealing capability is the compression set (CS) of the O-Ring material. Elastomers when under compression also show permanent plastic deformation (Figure 7).

The compression set is determined in accordance with ISO 815 as follows:

Standard test piece:	Cylindrical disc, diameter 13 mm (0.512 inch) and height 6 mm (0.236 inch)
Deformation:	25%
Tension release time:	e.g. 30 minutes

$$CS = \frac{h_0 - h_2}{h_0 - h_1} \cdot 100(\%)$$

Where h_0 = Original height (cross section d_2)
h_1 = Height in the compressed state
h_2 = Height after tension release

Design Instructions

Choice of Quad-Ring® size

The chosen cross section W should be in an appropriate ratio to the inside diameter d_1.

Elongation - Compression

With a radial sealing configuration, Quad-Ring® in an internal groove for external sealing should be stretched over the root of the groove. The maximum elongation in the installed state is 6% for Quad-Ring® with an inner diameter >50 mm and 8% for Quad-Ring® with an inner diameter <50 mm.

With external grooves for internal sealing applications - Quad-Ring® is installed in compressed state.
The maximum compression in the installed state is 3%.

Information regarding elongation and compression are for guidance only.

Exceeding these values will result in an unallowable increase or decrease in Quad-Ring® cross section. Consequently this can affect the service life of the seal. As a rule of thumb: a 1% increase in the inside diameter corresponds to a reduction in the cord diameter of approximately 0.5%.

Initial Squeeze

An initial sqeeze of Quad-Ring® in the groove is essential to ensure its function. It serves to:

- Achieve the initial sealing capability
- Bridge production-dependent tolerances
- Assure defined frictional forces
- Compensate for compression set
- Compensate for wear

Depending on the application, the following values apply for the initial squeeze:

Sealing force without and with system pressure

Dynamic applications:	6 to 18%
Static applications:	8 to 25%

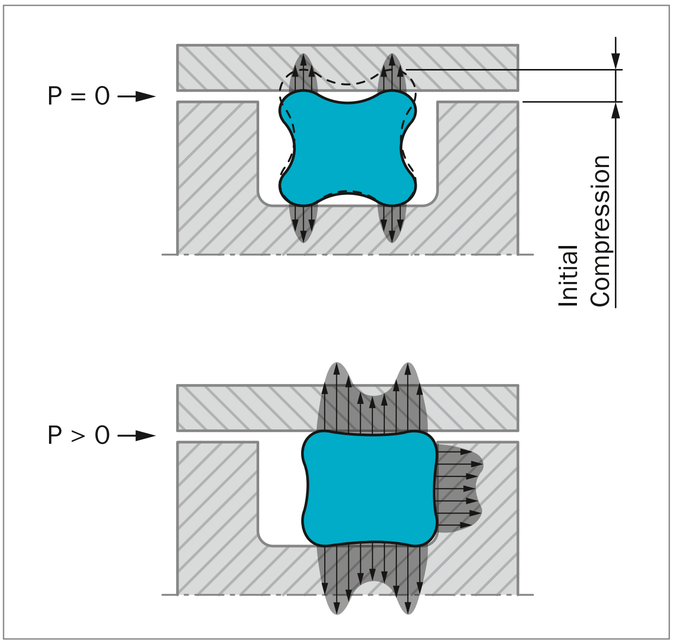

Figure 7: Sealing force without and with system pressure

METHODS OF INSTALLATION FOR QUAD-RING®

Quad-Ring® can be used in a wide variety of ways.

At the design stage, the subsequent installation situation should be taken into consideration. To avoid damage during installation it is not recommended to assemble the Quad-Ring® Seal over edges or bores. Where long sliding movements are involved, the seal seat should be recessed, if possible, or the sealing elements arranged so they only have to travel short distances during installation.

RADIAL INSTALLATION (STATIC AND DYNAMIC)

Internal sealing
Quad-Ring® size should be selected so that the inside diameter d_1 has the smallest possible deviation from the diameter to be sealed d_5 (Figure 8).

External sealing
Quad-Ring® size should be selected so that the inside diameter d_1 is equal to or smaller than the groove diameter d_3.

AXIAL-STATIC INSTALLATION

During axial-static installation, the direction of the pressure should be taken into consideration when choosing Quad-Ring® size (Figure 9).

With internal pressure, Quad-Ring® outside diameter should be chosen to be approximately 1 to 2% larger than the groove outside diameter.

With external pressure, Quad-Ring® should be chosen approximately 1 to 3% smaller than the groove inside diameter.

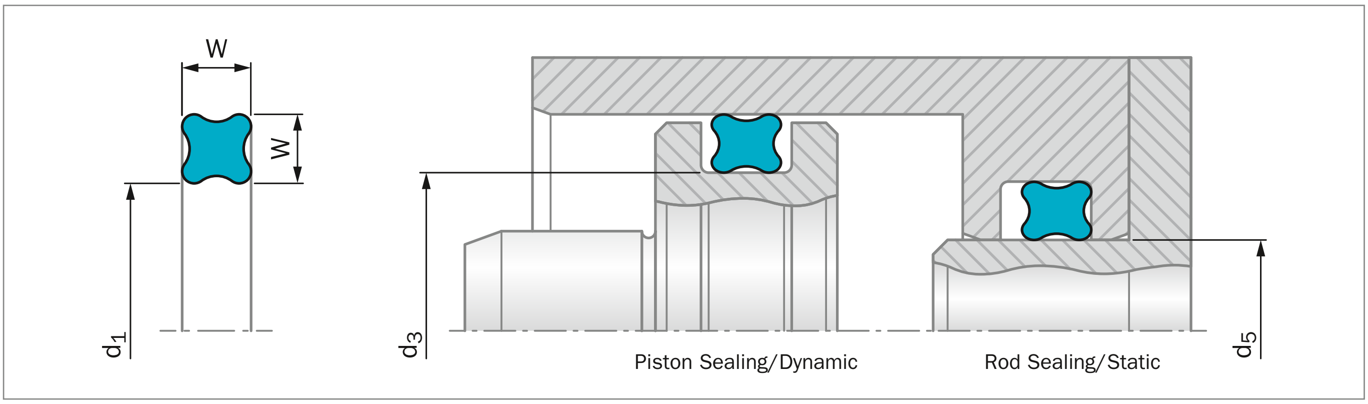

Figure 8: Radial installation, static and dynamic

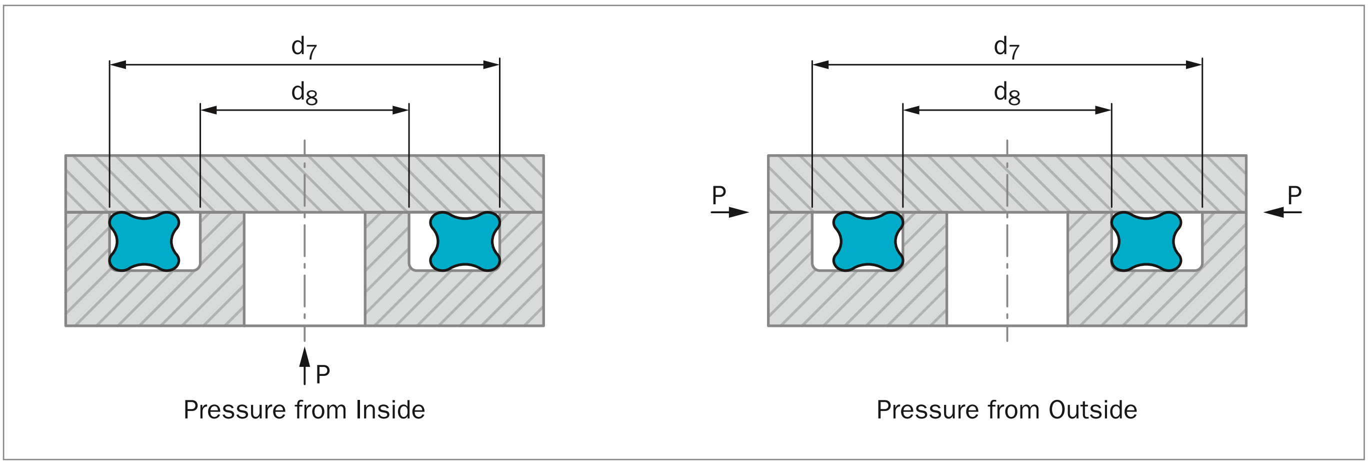

Figure 9: Axial installation, static

GROOVE DESIGN

Rectangular groove

Quad-Ring® are installed in rectangular grooves. The groove widths specified in our recommendations already take into account a limited swelling of the seals. The maximum permissible gap (Table 4) must be taken into consideration.

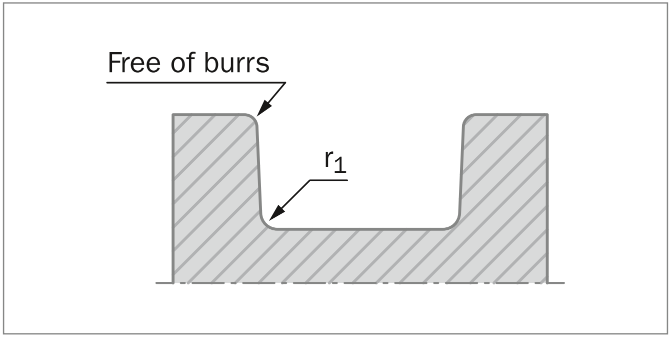

Figure 10: Groove Design

SURFACES

Under pressure, elastomers adapt to irregular surfaces. For gas or liquid-tight joints, however, certain minimum demands must be made on the surface quality of the surfaces to be sealed.

Fundamentally grooves, scratches, pit marks, concentric or spiral machining scores, etc. are not permissible. Higher demands must be placed on the surface quality of dynamic mating surfaces than on static sealing surfaces.

At present, no uniform definitions exist for describing the mating surfaces. In practice, the specification of the R_a value is not sufficient to permit an assessment of the surface quality. Our recommendations therefore contain amongst others various terms and definitions in accordance with DIN 4768 and DIN EN ISO 4287.

Table 2: Surface Finish

Type of Load	Surface	R_t µm	R_z µm	R_a µm
Radial-dynamic	Mating surface * (bore, rod, shaft)	≤ 2.5	≤ 1.6	≤ 0.4
	groove flanks, groove diameter	≤ 10.0	≤ 6.3	≤ 1.6
Radial-static Axial-static	Mating surface groove flanks, groove diameter	≤ 10.0 ≤ 16.0	≤ 6.3	≤ 1.6
	For pulsating pressures Mating surface groove flanks, groove diameter	≤ 6.3 ≤ 10.0	≤ 6.3	≤ 0.8 ≤ 1.6

* spiral free grinding.

The above is for guidance only and covers the majority of sealing applications. Trelleborg Sealing Solutions should be consulted in areas of particular concern.

LEAD-IN CHAMFERS

The subsequent installation requirements during the design of Quad-Ring® products can help to eliminate possible sources of damage and seal failure from the outset.

Since Quad-Ring® are usually fitted oversize, lead-in chamfers and rounded edges must be provided (Figure 11 and Figure 12).

The lengths of the lead-in chamfers are specified in Table 3.

The permissible surface roughness of the lead-in chamfer is defined as follows:

$R_z < 6.3$ µm $R_a < 0.8$ µm

Table 3: Lead-in Chamfers

Lead-in chamfers length Z min.		Quad-Ring® cross section W
15°	**20°**	
2.5	1.5	up to 1.78
3.0	2.0	up to 2.62
3.5	2.5	up to 3.53
4.5	3.5	up to 5.33
5.0	4.0	up to 6.99
6.0	4.5	above 6.99

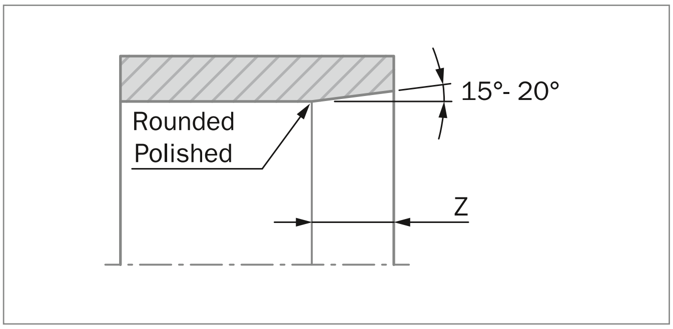

Figure 11: Lead-in chamfer for bores, tubes

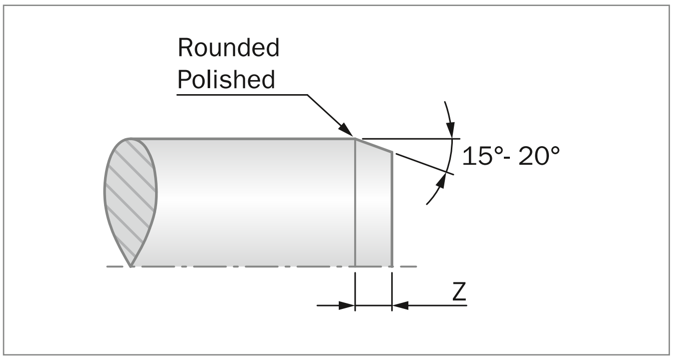

Figure 12: Lead-in chamfer for rods, shafts

SEALING GAPS

The tolerances and permissible gap dimensions S given in the installation Table 4, must be maintained.

If the extrusion gap is too large, there is a risk of seal extrusion which can result in the destruction of the Quad-Ring® .

The permissible gap S between the parts to be sealed depends on the system pressure, the cross section and the shore hardness of the Quad-Ring® .

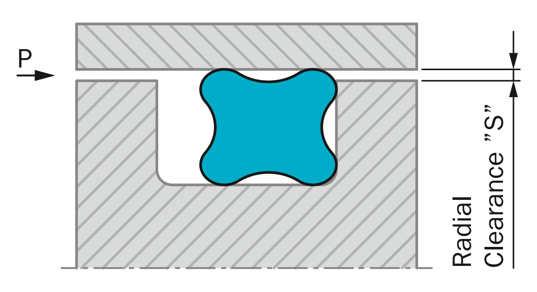

Figure 13: Radial clearance "S"

INSTALLATION OF QUAD-RING® WITH BACK-UP RINGS

Another possible method of protecting Quad-Ring® from extrusion into the gap is the additional installation of Back-up Rings.

The installation of Back-up Rings is generally recommended when at least one of the following conditions exists:

- High pressures - above approximately 5 MPa (50 bar)
- Large tolerances or gaps between the parts to be sealed
- High temperatures or temperature fluctuations during expansion of the parts under pressure
- High degree of contaminants in the system.

Where the pressure acts from only one side, it is sufficient to install a Back-up Ring on the side away from the pressure. Where the pressure acts from both sides, two Back-up Rings - one on each side of Quad-Ring® - are necessary.

A complete summary of our Back-up Ring product range can be found in the O-Rings and Back-up Rings catalog.

The following tables show Quad-Ring® / Back-up Ring combinations:

- External sealing installation, Table 6
- Internal sealing installation, Table 7
- Rotary sealing installation, Table 8

The selection series contains two Back-up Ring types:

- Split, spiral-type design, preferred for both external and internal sealing applications (bore and shaft)
- One-piece design, preferably for internal sealing applications (shaft) under radially-dynamic loads.

The usage of other Back-up Ring types than given is also possible.

The standard material for the Back-up Ring is virgin PTFE. Special materials, e.g. for injection molded Back-up Rings, is available on request.

■ Surface Finishing

In many cases standard elastomeric Quad-Ring® cannot be used without a modified surface. This may be necessary to reduce friction, eliminate potential contamination of the system, mark seals, or ensure tightness in special applications.

To prevent problems, Quad-Ring® can be surface-treated by special cleaning, treatment, coating or trimming in order to ease assembly, to ensure function and long service-life. Depending on the desired effect, multiple high-quality surface treatments or coatings can be used.

For further details regarding surface finishing of seals please contact your local Customer Solution Center.

■ Installation Instructions

GENERAL RECOMMENDATIONS

Before starting installation, check the following points:

- Lead-in chamfers made according to drawing?
- Bores deburred and edges rounded?
- Machining residues, e.g. chips, dirt and foreign particles, removed?
- Screw thread tips covered?
- Seals and components greased or oiled?
- Ensure media compatibility with the elastomer material. Trelleborg Sealing Solutions recommends to use the fluid to be sealed.
- Do not use lubricants with solid additives, e.g. molybdenum disulphide or zinc sulphide.

MANUAL INSTALLATION

- Use tools without sharp edges
- Ensure that the Quad-Ring® is not twisted, use installation aids to assist correct positioning wherever possible
- Do not over stretch

INSTALLATION OVER THREADS OR SPLINES

Should the Quad-Ring® have to be stretched over threads, splines, keyways etc., then an assembly mandrel is essential. This mandrel can either be manufactured in a soft metal or a plastic material without burrs or sharp edges.

AUTOMATIC INSTALLATION

Automatic seal installation requires good preparation. The surfaces of the Quad-Ring® are frequently treated by several methods (see brochure "Friction-free Running"). This offers a number of benefits during installation by

- Reducing the installation forces
- Non-stick effects, easy removal

The handling and installation of dimensionally unstable components requires a great deal of experience. Reliable automated installation thus demands special handling of seals.

Please ask our specialists for further details.

Installation Recommendations

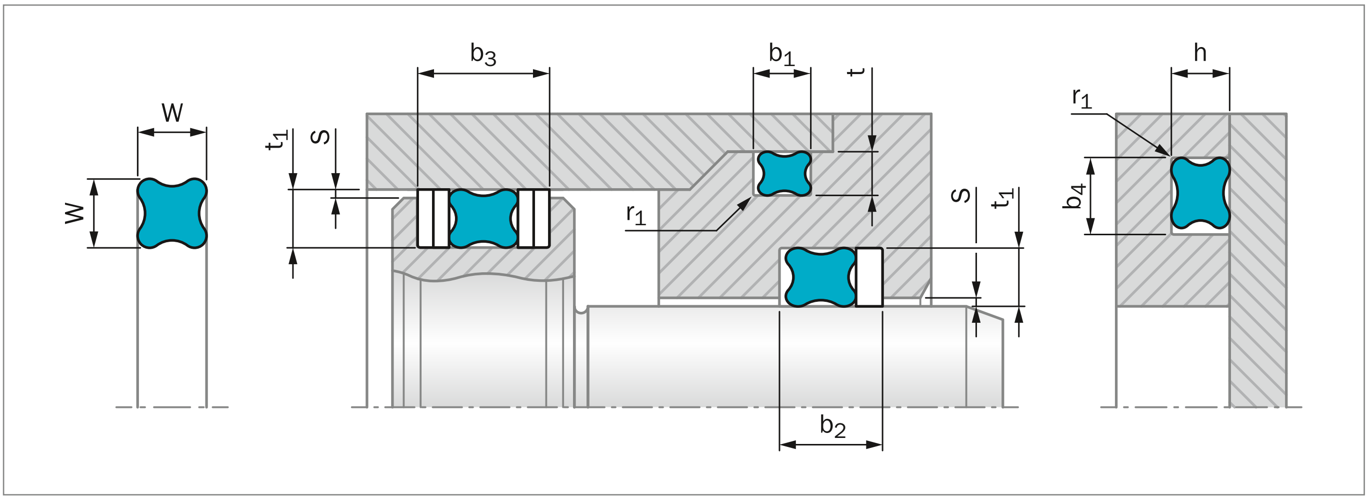

Figure 14: Installation Drawing

Table 4: Installation Dimensions

Cord Diameter	Groove Dimensions					Radius 3)	Radial Gap
	Groove Depth *1)		Groove Width **				
W	Dynamic t_1 + 0.05	Static t/h +0.05	b_1, b_4 +0.2	b_2 +0.2	b_3 +0.2	r_1	$S_{max.}$
1.02	0.80	0.75	1.20	2)	2)	0.10	0.03
1.27	1.00	0.90	1.40	2)	2)	0.10	0.03
1.52	1.25	1.15	1.70	2)	2)	0.22	0.04
1.78	1.50	1.40	2.00	2)	2)	0.22	0.05
2.62	2.30	2.25	3.00	2)	2)	0.30	0.08
3.53	3.20	3.10	4.00	2)	2)	0.40	0.08
5.33	4.90	4.75	6.00	2)	2)	0.40	0.10
6.99	6.40	6.20	8.00	2)	2)	0.60	0.10

Explanation for *, **, see page 13

1) O-Ring grooves can also be used generally. Friction may be higher in dynamic applications. Back-up Rings must be adapted.
2) When using Back-up Rings, the groove should be increased by the Back-up Ring thickness.
3) If a Back-up Ring is used, the recommended radius should always be r_1 = 0.25 ±0.2 mm.

GENERAL NOTES

* The values quoted for groove depth are average values and apply under medium load conditions in hydraulic applications. For eccentric piston positions or bending of the rod and in vacuum and low-pressure applications, the groove depth should be reduced and/or the initial squeeze increased.

** If a greater swelling of the seal material is anticipated, the groove width can be increased by up to approximately 20%.

The Installation Dimensions (Table 4, Table 6, Table 7 and Table 8) apply to Quad-Ring® of NBR. Basically all molds for Quad-Ring® production are laid out for shrinkage behavior of NBR materials.

Therefore the inside diameter and cross section of Quad-Ring® made from elastomers with a higher shrinkage, such as VMQ or FKM, may differ slightly. FKM Quad-Ring® will generally have slightly smaller dimensions than the corresponding NBR sizes.

Owing to this, in particular cases the groove depth must be reduced depending on the application and the nominal sizes of the seal.

As a guide value for the higher shrinkage of FKM materials, a difference of approximately 0.5% may be assumed. Exact values depend on the material and may deviate from this.

Quad-Ring® Dimensions in accordance with American O-Ring Standard AS568

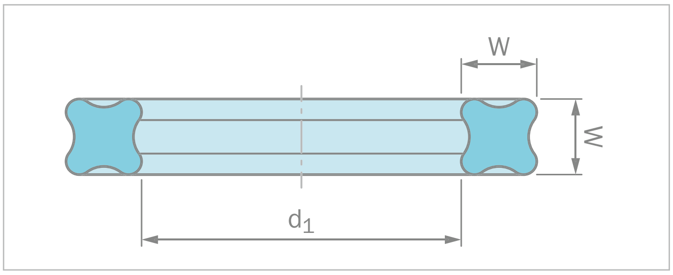

Figure 15: Quad-Ring®

Table 5: TSS Part No. / Dimensions

Part No.	Inside-Ø		Cord Diameter	
	d_1	±	W	±
QRAR04001	0.74	0.10	1.02	0.08
QRAR04002	1.07	0.10	1.27	0.08
QRAR04003	1.42	0.10	1.52	0.08
QRAR04004	1.78	0.13	1.78	0.08
QRAR04005	2.57	0.13	1.78	0.08
QRAR04006	2.90	0.13	1.78	0.08
QRAR04007	3.68	0.13	1.78	0.08
QRAR04008	4.47	0.13	1.78	0.08
QRAR04009	5.28	0.13	1.78	0.08
QRAR04010	6.07	0.13	1.78	0.08
QRAR04011	7.65	0.13	1.78	0.08
QRAR04012	9.25	0.13	1.78	0.08
QRAR04013	10.82	0.13	1.78	0.08
QRAR04014	12.42	0.13	1.78	0.08
QRAR04015	14.00	0.18	1.78	0.08
QRAR04016	15.60	0.23	1.78	0.08
QRAR04017	17.17	0.23	1.78	0.08
QRAR04018	18.77	0.23	1.78	0.08
QRAR04019	20.35	0.23	1.78	0.08
QRAR04020	21.95	0.23	1.78	0.08
QRAR04021	23.52	0.23	1.78	0.08
QRAR04022	25.12	0.25	1.78	0.08
QRAR04023	26.70	0.25	1.78	0.08
QRAR04024	28.30	0.25	1.78	0.08
QRAR04025	29.87	0.28	1.78	0.08
QRAR04026	31.47	0.28	1.78	0.08
QRAR04027	33.05	0.28	1.78	0.08
QRAR04028	34.65	0.33	1.78	0.08
QRAR04029	37.82	0.33	1.78	0.08
QRAR04030	41.00	0.33	1.78	0.08
QRAR04031	44.17	0.38	1.78	0.08
QRAR04032	47.35	0.38	1.78	0.08
QRAR04033	50.52	0.46	1.78	0.08
QRAR04034	53.70	0.46	1.78	0.08
QRAR04035	56.87	0.46	1.78	0.08
QRAR04036	60.05	0.46	1.78	0.08
QRAR04037	63.22	0.46	1.78	0.08
QRAR04038	66.40	0.51	1.78	0.08
QRAR04039	69.57	0.51	1.78	0.08
QRAR04040	72.75	0.51	1.78	0.08
QRAR04041	75.92	0.61	1.78	0.08
QRAR04042	82.27	0.61	1.78	0.08
QRAR04043	88.62	0.61	1.78	0.08
QRAR04044	94.97	0.69	1.78	0.08
QRAR04045	101.32	0.69	1.78	0.08
QRAR04046	107.67	0.76	1.78	0.08
QRAR04047	114.02	0.76	1.78	0.08
QRAR04048	120.37	0.76	1.78	0.08
QRAR04049	126.72	0.94	1.78	0.08
QRAR04050	133.07	0.94	1.78	0.08
QRAR04102	1.24	0.10	2.62	0.08
QRAR04103	2.06	0.10	2.62	0.08
QRAR04104	2.84	0.13	2.62	0.08
QRAR04105	3.63	0.13	2.62	0.08
QRAR04106	4.42	0.13	2.62	0.08
QRAR04107	5.23	0.13	2.62	0.08
QRAR04108	6.02	0.13	2.62	0.08
QRAR04109	7.59	0.13	2.62	0.08
QRAR04110	9.19	0.13	2.62	0.08
QRAR04111	10.77	0.13	2.62	0.08
QRAR04112	12.37	0.13	2.62	0.08
QRAR04113	13.94	0.18	2.62	0.08
QRAR04114	15.54	0.23	2.62	0.08
QRAR04115	17.12	0.23	2.62	0.08
QRAR04116	18.72	0.23	2.62	0.08
QRAR04117	20.29	0.25	2.62	0.08
QRAR04118	21.89	0.25	2.62	0.08
QRAR04119	23.47	0.25	2.62	0.08
QRAR04120	25.07	0.25	2.62	0.08
QRAR04121	26.64	0.25	2.62	0.08

Part No.	Inside-Ø		Cord Diameter	
	d_1	±	W	±
QRAR04122	28.24	0.25	2.62	0.08
QRAR04123	29.82	0.30	2.62	0.08
QRAR04124	31.42	0.30	2.62	0.08
QRAR04125	32.99	0.30	2.62	0.08
QRAR04126	34.59	0.30	2.62	0.08
QRAR04127	36.17	0.30	2.62	0.08
QRAR04128	37.77	0.30	2.62	0.08
QRAR04129	39.34	0.38	2.62	0.08
QRAR04130	40.94	0.38	2.62	0.08
QRAR04131	42.52	0.38	2.62	0.08
QRAR04132	44.12	0.38	2.62	0.08
QRAR04133	45.69	0.38	2.62	0.08
QRAR04134	47.29	0.38	2.62	0.08
QRAR04135	48.90	0.43	2.62	0.08
QRAR04136	50.47	0.43	2.62	0.08
QRAR04137	52.07	0.43	2.62	0.08
QRAR04138	53.64	0.43	2.62	0.08
QRAR04139	55.25	0.43	2.62	0.08
QRAR04140	56.82	0.43	2.62	0.08
QRAR04141	58.42	0.51	2.62	0.08
QRAR04142	59.99	0.51	2.62	0.08
QRAR04143	61.60	0.51	2.62	0.08
QRAR04144	63.17	0.51	2.62	0.08
QRAR04145	64.77	0.51	2.62	0.08
QRAR04146	66.34	0.51	2.62	0.08
QRAR04147	67.95	0.56	2.62	0.08
QRAR04148	69.52	0.56	2.62	0.08
QRAR04149	71.12	0.56	2.62	0.08
QRAR04150	72.69	0.56	2.62	0.08
QRAR04151	75.87	0.61	2.62	0.08
QRAR04152	82.22	0.61	2.62	0.08
QRAR04153	88.57	0.61	2.62	0.08
QRAR04154	94.92	0.71	2.62	0.08
QRAR04155	101.27	0.71	2.62	0.08
QRAR04156	107.62	0.76	2.62	0.08
QRAR04157	113.97	0.76	2.62	0.08
QRAR04158	120.32	0.76	2.62	0.08
QRAR04159	126.67	0.89	2.62	0.08
QRAR04160	133.02	0.89	2.62	0.08
QRAR04161	139.37	0.89	2.62	0.08
QRAR04162	145.72	0.89	2.62	0.08
QRAR04163	152.07	0.89	2.62	0.08
QRAR04164	158.42	1.02	2.62	0.08
QRAR04165	164.77	1.02	2.62	0.08

Part No.	Inside-Ø		Cord Diameter	
	d_1	±	W	±
QRAR04166	171.12	1.02	2.62	0.08
QRAR04167	177.47	1.02	2.62	0.08
QRAR04168	183.82	1.14	2.62	0.08
QRAR04169	190.17	1.14	2.62	0.08
QRAR04170	196.52	1.14	2.62	0.08
QRAR04171	202.87	1.14	2.62	0.08
QRAR04172	209.22	1.27	2.62	0.08
QRAR04173	215.57	1.27	2.62	0.08
QRAR04174	221.92	1.27	2.62	0.08
QRAR04175	228.27	1.27	2.62	0.08
QRAR04176	234.62	1.40	2.62	0.08
QRAR04177	240.97	1.40	2.62	0.08
QRAR04178	247.32	1.40	2.62	0.08
QRAR04202	5.94	0.13	3.53	0.10
QRAR04203	7.52	0.13	3.53	0.10
QRAR04204	9.12	0.13	3.53	0.10
QRAR04205	10.69	0.13	3.53	0.10
QRAR04206	12.29	0.13	3.53	0.10
QRAR04207	13.87	0.18	3.53	0.10
QRAR04208	15.47	0.23	3.53	0.10
QRAR04209	17.04	0.23	3.53	0.10
QRAR04210	18.64	0.25	3.53	0.10
QRAR04211	20.22	0.25	3.53	0.10
QRAR04212	21.82	0.25	3.53	0.10
QRAR04213	23.39	0.25	3.53	0.10
QRAR04214	24.99	0.25	3.53	0.10
QRAR04215	26.57	0.25	3.53	0.10
QRAR04216	28.17	0.30	3.53	0.10
QRAR04217	29.74	0.30	3.53	0.10
QRAR04218	31.34	0.30	3.53	0.10
QRAR04219	32.92	0.30	3.53	0.10
QRAR04220	34.52	0.30	3.53	0.10
QRAR04221	36.09	0.30	3.53	0.10
QRAR04222	37.69	0.38	3.53	0.10
QRAR04223	40.87	0.38	3.53	0.10
QRAR04224	44.04	0.38	3.53	0.10
QRAR04225	47.22	0.46	3.53	0.10
QRAR04226	50.39	0.46	3.53	0.10
QRAR04227	53.57	0.46	3.53	0.10
QRAR04228	56.74	0.51	3.53	0.10
QRAR04229	59.92	0.51	3.53	0.10
QRAR04230	63.09	0.51	3.53	0.10
QRAR04231	66.27	0.51	3.53	0.10
QRAR04232	69.44	0.61	3.53	0.10

Part No.	Inside-Ø		Cord Diameter	
	d_1	±	W	±
QRAR04233	72.62	0.61	3.53	0.10
QRAR04234	75.79	0.61	3.53	0.10
QRAR04235	78.97	0.61	3.53	0.10
QRAR04236	82.14	0.61	3.53	0.10
QRAR04237	85.32	0.61	3.53	0.10
QRAR04238	88.49	0.61	3.53	0.10
QRAR04239	91.67	0.71	3.53	0.10
QRAR04240	94.84	0.71	3.53	0.10
QRAR04241	98.02	0.71	3.53	0.10
QRAR04242	101.19	0.71	3.53	0.10
QRAR04243	104.37	0.71	3.53	0.10
QRAR04244	107.54	0.76	3.53	0.10
QRAR04245	110.72	0.76	3.53	0.10
QRAR04246	113.89	0.76	3.53	0.10
QRAR04247	117.07	0.76	3.53	0.10
QRAR04248	120.24	0.76	3.53	0.10
QRAR04249	123.42	0.84	3.53	0.10
QRAR04250	126.59	0.84	3.53	0.10
QRAR04251	129.77	0.84	3.53	0.10
QRAR04252	132.94	0.89	3.53	0.10
QRAR04253	136.12	0.89	3.53	0.10
QRAR04254	139.29	0.89	3.53	0.10
QRAR04255	142.47	0.89	3.53	0.10
QRAR04256	145.64	0.89	3.53	0.10
QRAR04257	148.82	0.89	3.53	0.10
QRAR04258	151.99	0.89	3.53	0.10
QRAR04259	158.34	1.02	3.53	0.10
QRAR04260	164.69	1.02	3.53	0.10
QRAR04261	171.04	1.02	3.53	0.10
QRAR04262	177.39	1.02	3.53	0.10
QRAR04263	183.74	1.14	3.53	0.10
QRAR04264	190.09	1.14	3.53	0.10
QRAR04265	196.44	1.14	3.53	0.10
QRAR04266	202.79	1.14	3.53	0.10
QRAR04267	209.14	1.27	3.53	0.10
QRAR04268	215.49	1.27	3.53	0.10
QRAR04269	221.84	1.27	3.53	0.10
QRAR04270	228.19	1.27	3.53	0.10
QRAR04271	234.54	1.40	3.53	0.10
QRAR04272	240.89	1.40	3.53	0.10
QRAR04273	247.24	1.40	3.53	0.10
QRAR04274	253.59	1.40	3.53	0.10
QRAR04275	266.29	1.40	3.53	0.10
QRAR04276	278.99	1.65	3.53	0.10

Part No.	Inside-Ø		Cord Diameter	
	d_1	±	W	±
QRAR04277	291.69	1.65	3.53	0.10
QRAR04278	304.39	1.65	3.53	0.10
QRAR04279	329.79	1.65	3.53	0.10
QRAR04280	355.19	1.65	3.53	0.10
QRAR04281	380.59	1.65	3.53	0.10
QRAR04282	405.26	1.90	3.53	0.10
QRAR04283	430.66	2.16	3.53	0.10
QRAR04284	456.06	2.42	3.53	0.10
QRAR04309	10.46	0.13	5.33	0.13
QRAR04310	12.07	0.13	5.33	0.13
QRAR04311	13.64	0.18	5.33	0.13
QRAR04312	15.24	0.23	5.33	0.13
QRAR04313	16.81	0.23	5.33	0.13
QRAR04314	18.42	0.25	5.33	0.13
QRAR04315	19.99	0.25	5.33	0.13
QRAR04316	21.59	0.25	5.33	0.13
QRAR04317	23.16	0.25	5.33	0.13
QRAR04318	24.77	0.25	5.33	0.13
QRAR04319	26.34	0.25	5.33	0.13
QRAR04320	27.94	0.30	5.33	0.13
QRAR04321	29.51	0.30	5.33	0.13
QRAR04322	31.12	0.30	5.33	0.13
QRAR04323	32.69	0.30	5.33	0.13
QRAR04324	34.29	0.30	5.33	0.13
QRAR04325	37.47	0.38	5.33	0.13
QRAR04326	40.64	0.38	5.33	0.13
QRAR04327	43.82	0.38	5.33	0.13
QRAR04328	46.99	0.38	5.33	0.13
QRAR04329	50.17	0.46	5.33	0.13
QRAR04330	53.34	0.46	5.33	0.13
QRAR04331	56.52	0.46	5.33	0.13
QRAR04332	59.69	0.46	5.33	0.13
QRAR04333	62.87	0.51	5.33	0.13
QRAR04334	66.04	0.51	5.33	0.13
QRAR04335	69.22	0.51	5.33	0.13
QRAR04336	72.39	0.51	5.33	0.13
QRAR04337	75.57	0.61	5.33	0.13
QRAR04338	78.74	0.61	5.33	0.13
QRAR04339	81.92	0.61	5.33	0.13
QRAR04340	85.09	0.61	5.33	0.13
QRAR04341	88.27	0.61	5.33	0.13
QRAR04342	91.44	0.71	5.33	0.13
QRAR04343	94.62	0.71	5.33	0.13
QRAR04344	97.79	0.71	5.33	0.13

Part No.	Inside-Ø		Cord Diameter	
	d_1	±	W	±
QRAR04345	100.97	0.71	5.33	0.13
QRAR04346	104.14	0.71	5.33	0.13
QRAR04347	107.32	0.76	5.33	0.13
QRAR04348	110.49	0.76	5.33	0.13
QRAR04349	113.67	0.76	5.33	0.13
QRAR04350	116.84	0.76	5.33	0.13
QRAR04351	120.02	0.76	5.33	0.13
QRAR04352	123.19	0.76	5.33	0.13
QRAR04353	126.37	0.94	5.33	0.13
QRAR04354	129.54	0.94	5.33	0.13
QRAR04355	132.72	0.94	5.33	0.13
QRAR04356	135.89	0.94	5.33	0.13
QRAR04357	139.07	0.94	5.33	0.13
QRAR04358	142.24	0.94	5.33	0.13
QRAR04359	145.42	0.94	5.33	0.13
QRAR04360	148.49	0.94	5.33	0.13
QRAR04361	151.77	0.94	5.33	0.13
QRAR04362	158.12	1.02	5.33	0.13
QRAR04363	164.47	1.02	5.33	0.13
QRAR04364	170.82	1.02	5.33	0.13
QRAR04365	177.17	1.02	5.33	0.13
QRAR04366	183.52	1.14	5.33	0.13
QRAR04367	189.87	1.14	5.33	0.13
QRAR04368	196.22	1.14	5.33	0.13
QRAR04369	202.57	1.14	5.33	0.13
QRAR04370	208.92	1.27	5.33	0.13
QRAR04371	215.27	1.27	5.33	0.13
QRAR04372	221.62	1.27	5.33	0.13
QRAR04373	227.97	1.27	5.33	0.13
QRAR04374	234.32	1.40	5.33	0.13
QRAR04375	240.67	1.40	5.33	0.13
QRAR04376	247.02	1.40	5.33	0.13
QRAR04377	253.37	1.40	5.33	0.13
QRAR04378	266.07	1.52	5.33	0.13
QRAR04379	278.77	1.52	5.33	0.13
QRAR04380	291.47	1.65	5.33	0.13
QRAR04381	304.17	1.65	5.33	0.13
QRAR04382	329.57	1.65	5.33	0.13
QRAR04383	354.97	1.78	5.33	0.13
QRAR04384	380.37	1.78	5.33	0.13
QRAR04385	405.26	1.91	5.33	0.13
QRAR04386	430.66	2.03	5.33	0.13
QRAR04387	456.06	2.15	5.33	0.13
QRAR04388	481.41	2.25	5.33	0.13

Part No.	Inside-Ø		Cord Diameter	
	d_1	±	W	±
QRAR04389	506.81	2.41	5.33	0.13
QRAR04390	532.21	2.41	5.33	0.13
QRAR04391	557.61	2.54	5.33	0.13
QRAR04392	582.68	2.67	5.33	0.13
QRAR04393	608.08	2.79	5.33	0.13
QRAR04394	633.48	2.92	5.33	0.13
QRAR04395	658.88	3.05	5.33	0.13
QRAR04425	113.67	0.84	6.99	0.15
QRAR04426	116.84	0.84	6.99	0.15
QRAR04427	120.02	0.84	6.99	0.15
QRAR04428	123.19	0.84	6.99	0.15
QRAR04429	126.37	0.94	6.99	0.15
QRAR04430	129.54	0.94	6.99	0.15
QRAR04431	132.72	0.94	6.99	0.15
QRAR04432	135.89	0.94	6.99	0.15
QRAR04433	139.07	0.94	6.99	0.15
QRAR04434	142.24	0.94	6.99	0.15
QRAR04435	145.42	0.94	6.99	0.15
QRAR04436	148.59	0.94	6.99	0.15
QRAR04437	151.77	0.94	6.99	0.15
QRAR04438	158.12	1.02	6.99	0.15
QRAR04439	164.47	1.02	6.99	0.15
QRAR04440	170.82	1.02	6.99	0.15
QRAR04441	177.17	1.02	6.99	0.15
QRAR04442	183.52	1.14	6.99	0.15
QRAR04443	189.87	1.14	6.99	0.15
QRAR04444	196.22	1.14	6.99	0.15
QRAR04445	202.57	1.14	6.99	0.15
QRAR04446	215.27	1.40	6.99	0.15
QRAR04447	227.97	1.40	6.99	0.15
QRAR04448	240.67	1.40	6.99	0.15
QRAR04449	253.37	1.40	6.99	0.15
QRAR04450	266.07	1.52	6.99	0.15
QRAR04451	278.77	1.52	6.99	0.15
QRAR04452	291.47	1.52	6.99	0.15
QRAR04453	304.17	1.52	6.99	0.15
QRAR04454	316.87	1.52	6.99	0.15
QRAR04455	329.57	1.52	6.99	0.15
QRAR04456	342.27	1.79	6.99	0.15
QRAR04457	354.97	1.79	6.99	0.15
QRAR04458	367.67	1.79	6.99	0.15
QRAR04459	380.37	1.79	6.99	0.15
QRAR04460	393.07	1.79	6.99	0.15
QRAR04461	405.26	1.90	6.99	0.15

Part No.	Inside-Ø		Cord Diameter	
	d_1	±	W	±
QRAR04462	417.96	1.90	6.99	0.15
QRAR04463	430.66	2.05	6.99	0.15
QRAR04464	443.36	2.15	6.99	0.15
QRAR04465	456.06	2.15	6.99	0.15
QRAR04466	468.76	2.15	6.99	0.15
QRAR04467	481.46	2.29	6.99	0.15
QRAR04468	494.16	2.29	6.99	0.15
QRAR04469	506.86	2.41	6.99	0.15
QRAR04470	532.26	2.41	6.99	0.15
QRAR04471	557.66	2.55	6.99	0.15
QRAR04472	582.68	2.65	6.99	0.15
QRAR04473	608.08	2.80	6.99	0.15
QRAR04474	633.48	2.90	6.99	0.15
QRAR04475	658.87	3.05	6.99	0.15

Further sizes available on request

The specified tolerances for d_1 and W apply only to Quad-Ring® made from the Nitrile Butadiene Rubber with a hardness of 70 Shore A. With other elastomer qualities and hardnesses, slight deviations from the values in the tables are possible due to the different shrinkage behavior.

ORDERING EXAMPLE

Quad-Ring® No. 4214 (in accordance with AS568)

Dimensions: Insider diameter d_1 = 24.99 mm
Cord diameter W = 3.53 mm
Material: NBR 70
(Nitrile Butadiene Rubber, 70 Shore A)

TSS Article No. **QRAR04214 - N7004**
TSS Series No.
Quality Index (Standard)
Compound No. (Standard)

Quad-Ring® dimensions and TSS Part No., see Table 5.

Material No., see Table 1.

Installation dimensions, see Table 4.

Orders detailing size and material are also possible.

Installation Recommendation / Quad-Ring® with Back-up Ring for Reciprocating Applications - External

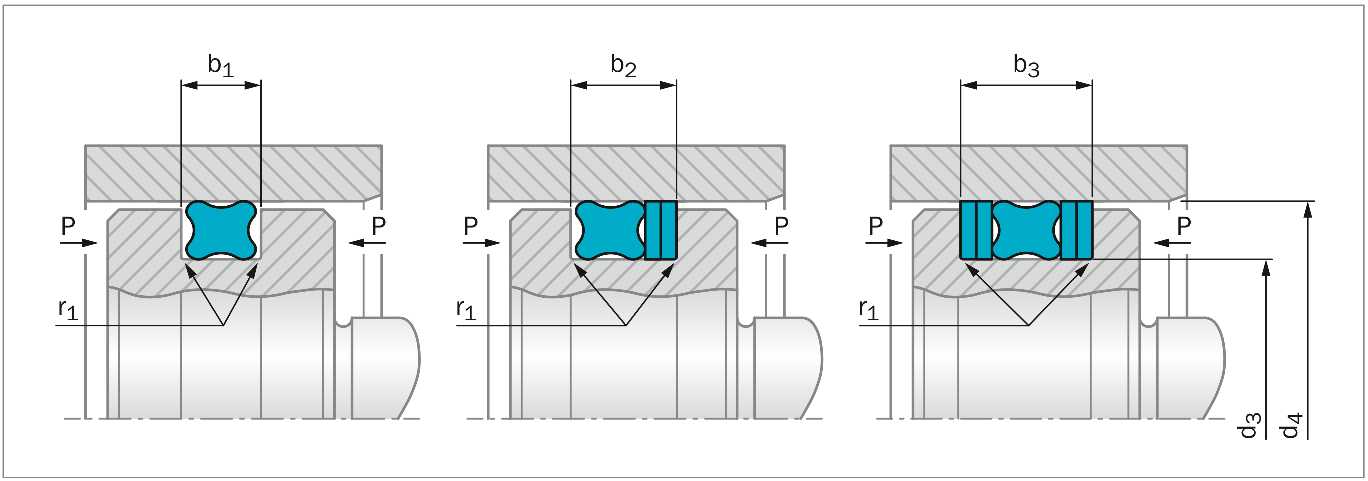

Figure 16: Installation Drawing

The following data regarding Back-up Rings and groove widths b_2 and b_3 are examples only. The use and the suitability of a Back-up Ring type, as well as the design of the appropriate groove widths b_2 and b_3, should be verified and adapted based on the application. For further information, please refer to the O-Ring and Back-up Rings Catalog.

Table 6: TSS Part No. / Installation Dimensions

Bore	Quad-Ring® Part No.	Dimensions	Back-up Ring, Spiral Part No.	Groove-Ø	Groove Width			Radius1)
d_4 H8				d_3 h9	b_1 +0.2	b_2 +0.2	b_3 +0.2	r_1
6.0	QRAR04005	2.57x1.78	BP1500030	3.0	2.0	3.4	4.8	0.2
8.0	QRAR04008	4.47x1.78	BP1500050	5.0	2.0	3.4	4.8	0.2
10.0	QRAR04010	6.07x1.78	BP1500070	7.0	2.0	3.4	4.8	0.2
12.0	QRAR4012A	8.20x1.78	BP1500090	9.0	2.0	3.4	4.8	0.2
14.0	QRAR04013	10.82x1.78	BP1500110	11.0	2.0	3.4	4.8	0.2
15.0	QRAR4111A	10.20x2.62	BP2300104	10.4	3.0	4.4	5.8	0.3
16.0	QRAR04111	10.77x2.62	BP2300114	11.4	3.0	4.4	5.8	0.3
18.0	QRAR04112	12.37x2.62	BP2300134	13.4	3.0	4.4	5.8	0.3
20.0	QRAR4114A	14.70x2.62	BP2300154	15.4	3.0	4.4	5.8	0.3
22.0	QRAR4115A	16.20x2.62	BP2300174	17.4	3.0	4.4	5.8	0.3
25.0	QRAR4210A	18.20x3.53	BP32D0186	18.6	4.0	5.4	6.8	0.4
28.0	QRAR04212	21.82x3.53	BP32D0216	21.6	4.0	5.4	6.8	0.4
30.0	QRAR04213	23.39x3.53	BP32D0236	23.6	4.0	5.4	6.8	0.4
32.0	QRAR04214	24.99x3.53	BP32D0256	25.6	4.0	5.4	6.8	0.4
35.0	QRAR04216	28.17x3.53	BP32D0286	28.6	4.0	5.4	6.8	0.4
40.0	QRAR04219	32.92x3.53	BP32D0336	33.6	4.0	5.4	6.8	0.4
42.0	QRAR04220	34.52x3.53	BP32D0356	35.6	4.0	5.4	6.8	0.4
45.0	QRAR04222	37.69x3.53	BP32D0386	38.6	4.0	5.4	6.8	0.4
48.0	QRAR04325	37.46x5.33	BP4900382	38.2	6.0	7.7	9.4	0.4
50.0	QRAR4326A	39.20x5.33	BP4900402	40.2	6.0	7.7	9.4	0.4

Bore	Quad-Ring® Part No.	Dimensions	Back-up Ring, Spiral Part No.	Groove-Ø	Groove Width			Radius1)
d_4 H8				d_3 h9	b_1 +0.2	b_2 +0.2	b_3 +0.2	r_1
52.0	QRAR04326	40.64x5.33	BP4900422	42.2	6.0	7.7	9.4	0.4
55.0	QRAR04327	43.82x5.33	BP4900452	45.2	6.0	7.7	9.4	0.4
60.0	QRAR04329	50.17x5.33	BP4900502	50.2	6.0	7.7	9.4	0.4
63.0	QRAR04330	53.34x5.33	BP4900532	53.2	6.0	7.7	9.4	0.4
65.0	QRAR04330	53.34x5.33	BP4900552	55.2	6.0	7.7	9.4	0.4
70.0	QRAR04332	59.69x5.33	BP4900602	60.2	6.0	7.7	9.4	0.4
75.0	QRAR04333	62.87x5.33	BP4900652	65.2	6.0	7.7	9.4	0.4
80.0	QRAR04335	69.22x5.33	BP4900702	70.2	6.0	7.7	9.4	0.4
85.0	QRAR04337	75.57x5.33	BP4900752	75.2	6.0	7.7	9.4	0.4
90.0	QRAR04338	78.74x5.33	BP4900802	80.2	6.0	7.7	9.4	0.4
95.0	QRAR04340	85.09x5.33	BP4900852	85.2	6.0	7.7	9.4	0.4
100.0	QRAR04342	91.44x5.33	BP4900902	90.2	6.0	7.7	9.4	0.4
105.0	QRAR04343	94.62x5.33	BP4900952	95.2	6.0	7.7	9.4	0.4
110.0	QRAR04345	100.97x5.33	BP4901002	100.2	6.0	7.7	9.4	0.4
115.0	QRAR04346	104.14x5.33	BP4901052	105.2	6.0	7.7	9.4	0.4
120.0	QRAR04348	110.49x5.33	BP4901102	110.2	6.0	7.7	9.4	0.4
125.0	QRAR04349	113.67x5.33	BP4901152	115.2	6.0	7.7	9.4	0.4
130.0	QRAR04351	120.02x5.33	BP4901202	120.2	6.0	7.7	9.4	0.4
135.0	QRAR04427	120.02x6.99	BP64K1222	122.2	8.0	10.5	13.0	0.6
140.0	QRAR04429	126.37x6.99	BP64K1272	127.2	8.0	10.5	13.0	0.6
150.0	QRAR04432	135.89x6.99	BP64K1372	137.2	8.0	10.5	13.0	0.6
160.0	QRAR04435	145.42x6.99	BP64K1472	147.2	8.0	10.5	13.0	0.6
170.0	QRAR04438	158.12x6.99	BP64K1572	157.2	8.0	10.5	13.0	0.6
180.0	QRAR04439	164.47x6.99	BP64K1672	167.2	8.0	10.5	13.0	0.6
190.0	QRAR04441	177.17x6.99	BP64K1772	177.2	8.0	10.5	13.0	0.6
200.0	QRAR04442	183.52x6.99	BP64K1872	187.2	8.0	10.5	13.0	0.6
210.0	QRAR04444	196.22x6.99	BP64K1972	197.2	8.0	10.5	13.0	0.6
220.0	QRAR04445	202.57x6.99	BP64K2072	207.2	8.0	10.5	13.0	0.6
230.0	QRAR04446	215.27x6.99	BP64K2172	217.2	8.0	10.5	13.0	0.6
240.0	QRAR04447	227.97x6.99	BP64K2272	227.2	8.0	10.5	13.0	0.6
250.0	QRAR04447	227.97x6.99	BP64K2372	237.2	8.0	10.5	13.0	0.6
280.0	QRAR04450	266.07x6.99	BP64K2672	267.2	8.0	10.5	13.0	0.6
300.0	QRAR04451	278.77x6.99	BP64K2872	287.2	8.0	10.5	13.0	0.6
320.0	QRAR04453	304.17x6.99	BP64K3072	307.2	8.0	10.5	13.0	0.6
350.0	QRAR04455	329.57x6.99	BP64K3372	337.2	8.0	10.5	13.0	0.6
400.0	QRAR04459	380.37x6.99	BP64K3872	387.2	8.0	10.5	13.0	0.6
420.0	QRAR04461	405.26x6.99	BP64K4072	407.2	8.0	10.5	13.0	0.6
450.0	QRAR04463	430.66x6.99	BP64K4372	437.2	8.0	10.5	13.0	0.6
480.0	QRAR04465	456.06x6.99	BP64K4672	467.2	8.0	10.5	13.0	0.6
500.0	QRAR04467	481.46x6.99	BP64K4872	487.2	8.0	10.5	13.0	0.6

1) If a Back-up Ring is used, the recommended radius should always be r_1 = 0.25 ±0.2 mm.
Further sizes on request
Materials for Quad-Ring®, see Table 1.

Installation Recommendation / Quad-Ring® with Back-up Ring for Reciprocating Applications - Internal

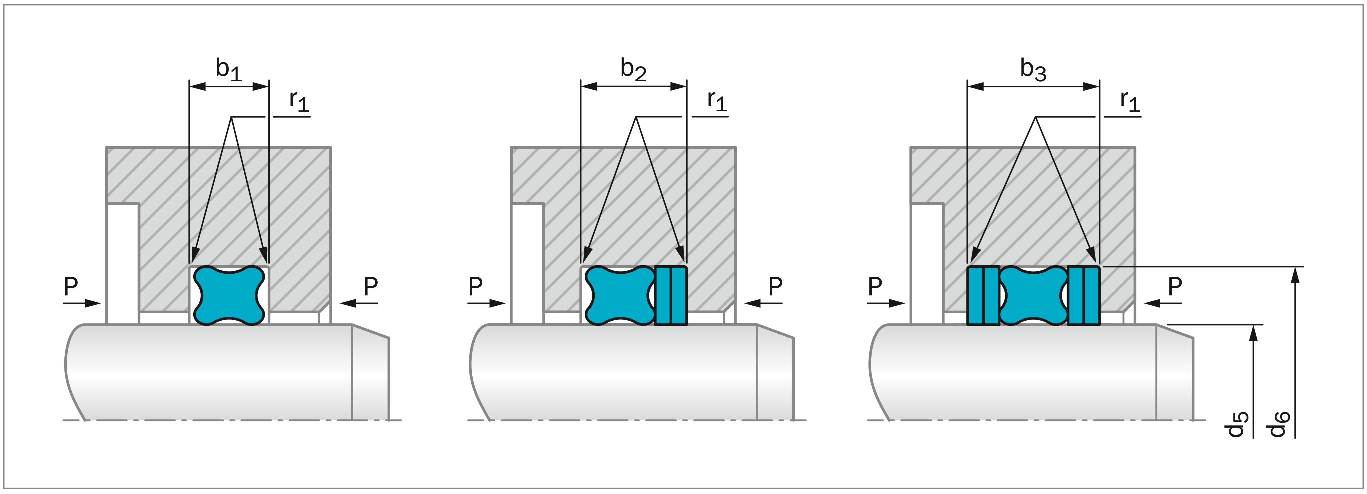

Figure 17: Installation Drawing

The following data regarding Back-up Rings and groove widths b_2 and b_3 are examples only. The use and the suitability of a Back-up Ring type, as well as the design of the appropriate groove widths b_2 and b_3, should be verified and adapted based on the application. For further information, please refer to the O-Ring and Back-up Rings Catalog.

Table 7: TSS Part No. / Installation Dimensions

Rod	Quad-Ring® Part No.	Dimensions	Back-up Ring, Spiral Part No.	Groove-Ø	Groove Width			Radius1)
d_5 f7				d_6 h9	b_1 +0.2	b_2 +0.2	b_3 +0.2	r_1
4.0	QRAR04008	4.47x1.78	BP1500040	7.0	2.0	3.4	4.8	0.2
5.0	QRAR04009	5.28x1.78	BP1500050	8.0	2.0	3.4	4.8	0.2
6.0	QRAR04010	6.07x1.78	BP1500060	9.0	2.0	3.4	4.8	0.2
8.0	QRAR4012A	8.20x1.78	BP1500080	11.0	2.0	3.4	4.8	0.2
10.0	QRAR4111A	10.20x2.62	BP2300100	14.6	3.0	4.4	5.8	0.3
12.0	QRAR04112	12.37x2.62	BP2300120	16.6	3.0	4.4	5.8	0.3
14.0	QRAR04113	13.94x2.62	BP2300140	18.6	3.0	4.4	5.8	0.3
15.0	QRAR4114A	14.70x2.62	BP2300150	19.6	3.0	4.4	5.8	0.3
16.0	QRAR4115A	16.20x2.62	BP2300160	20.6	3.0	4.4	5.8	0.3
18.0	QRAR4210A	18.20x3.53	BP32D0180	24.4	4.0	5.4	6.8	0.4
20.0	QRAR04211	20.22x3.53	BP32D0200	26.4	4.0	5.4	6.8	0.4
22.0	QRAR04212	21.83x3.53	BP32D0220	28.4	4.0	5.4	6.8	0.4
25.0	QRAR04214	24.99x3.53	BP32D0250	31.4	4.0	5.4	6.8	0.4
28.0	QRAR04216	28.17x3.53	BP32D0280	34.4	4.0	5.4	6.8	0.4
30.0	QRAR04217	29.74x3.53	BP32D0300	36.4	4.0	5.4	6.8	0.4
32.0	QRAR04218	31.34x3.53	BP32D0320	38.4	4.0	5.4	6.8	0.4
35.0	QRAR04220	34.52x3.53	BP32D0350	41.4	4.0	5.4	6.8	0.4
36.0	QRAR04221	36.09x3.53	BP32D0360	42.4	4.0	5.4	6.8	0.4
40.0	QRAR04326	40.64x5.33	BP4900400	49.8	6.0	7.7	9.4	0.4
42.0	QRAR04326	40.64x5.33	BP4900420	51.8	6.0	7.7	9.4	0.4

Rod	Quad-Ring® Part No.	Dimensions	Back-up Ring, Spiral Part No.	Groove-Ø	Groove Width			Radius1)
d_5 f7				d_6 h9	b_1 +0.2	b_2 +0.2	b_3 +0.2	r_1
45.0	QRAR4328A	45.20x5.33	BP4900450	54.8	6.0	7.7	9.4	0.4
48.0	QRAR04328	46.99x5.33	BP4900480	57.8	6.0	7.7	9.4	0.4
50.0	QRAR04329	50.17x5.33	BP4900500	59.8	6.0	7.7	9.4	0.4
52.0	QRAR04329	50.17x5.33	BP4900520	61.8	6.0	7.7	9.4	0.4
55.0	QRAR04330	53.34x5.33	BP4900550	64.8	6.0	7.7	9.4	0.4
56.0	QRAR04331	56.52x5.33	BP4900560	65.8	6.0	7.7	9.4	0.4
60.0	QRAR04332	59.69x5.33	BP4900600	69.8	6.0	7.7	9.4	0.4
63.0	QRAR04333	62.87x5.33	BP4900630	72.8	6.0	7.7	9.4	0.4
65.0	QRAR04334	66.04x5.33	BP4900650	74.8	6.0	7.7	9.4	0.4
70.0	QRAR04335	69.22x5.33	BP4900700	79.8	6.0	7.7	9.4	0.4
75.0	QRAR04337	75.57x5.33	BP4900750	84.8	6.0	7.7	9.4	0.4
80.0	QRAR04338	78.74x5.33	BP4900800	89.8	6.0	7.7	9.4	0.4
85.0	QRAR04340	85.09x5.33	BP4900850	94.8	6.0	7.7	9.4	0.4
90.0	QRAR04342	91.44x5.33	BP4900900	99.8	6.0	7.7	9.4	0.4
100.0	QRAR04345	100.97x5.33	BP4901000	109.8	6.0	7.7	9.4	0.4
105.0	QRAR04346	104.14x5.33	BP4901050	114.8	6.0	7.7	9.4	0.4
110.0	QRAR04348	110.49x5.33	BP4901100	119.8	6.0	7.7	9.4	0.4
115.0	QRAR04426	116.84x6.99	BP64K1150	127.8	8.0	10.5	13.0	0.6
120.0	QRAR04427	120.02x6.99	BP64K1200	132.8	8.0	10.5	13.0	0.6
125.0	QRAR04429	126.37x6.99	BP64K1250	137.8	8.0	10.5	13.0	0.6
130.0	QRAR04430	129.54x6.99	BP64K1300	142.8	8.0	10.5	13.0	0.6
135.0	QRAR04432	135.89x6.99	BP64K1350	147.8	8.0	10.5	13.0	0.6
140.0	QRAR04433	139.07x6.99	BP64K1400	152.8	8.0	10.5	13.0	0.6
150.0	QRAR04436	148.59x6.99	BP64K1500	162.8	8.0	10.5	13.0	0.6
160.0	QRAR4439A	160.50x6.99	BP64K1600	172.8	8.0	10.5	13.0	0.6
170.0	QRAR04440	170.82x6.99	BP64K1700	182.8	8.0	10.5	13.0	0.6
180.0	QRAR04441	177.17x6.99	BP64K1800	192.8	8.0	10.5	13.0	0.6
190.0	QRAR04443	189.87x6.99	BP64K1900	202.8	8.0	10.5	13.0	0.6
200.0	QRAR04445	202.57x6.99	BP64K2000	212.8	8.0	10.5	13.0	0.6
210.0	QRAR04446	215.27x6.99	BP64K2100	222.8	8.0	10.5	13.0	0.6
220.0	QRAR04446	215.27x6.99	BP64K2200	232.8	8.0	10.5	13.0	0.6
230.0	QRAR04447	227.97x6.99	BP64K2300	242.8	8.0	10.5	13.0	0.6
240.0	QRAR04448	240.67x6.99	BP64K2400	252.8	8.0	10.5	13.0	0.6
250.0	QRAR04449	253.37x6.99	BP64K2500	262.8	8.0	10.5	13.0	0.6
280.0	QRAR04451	278.77x6.99	BP64K2800	292.8	8.0	10.5	13.0	0.6
300.0	QRAR04453	304.17x6.99	BP64K3000	312.8	8.0	10.5	13.0	0.6
320.0	QRAR04454	316.87x6.99	BP64K3200	332.8	8.0	10.5	13.0	0.6
350.0	QRAR04457	354.97x6.99	BP64K3500	362.8	8.0	10.5	13.0	0.6
360.0	QRAR04457	354.97x6.99	BP64K3600	372.8	8.0	10.5	13.0	0.6
400.0	QRAR04461	405.26x6.99	BP64K4000	412.8	8.0	10.5	13.0	0.6

1) If a Back-up Ring is used the recommended radius should always be r_1 = 0.25 ±0.2 mm.
Further sizes on request
Materials for Quad-Ring® , see Table 1.

Installation Recommendation / Quad-Ring® with uncut Back-up Ring for Rotary Applications - Internal

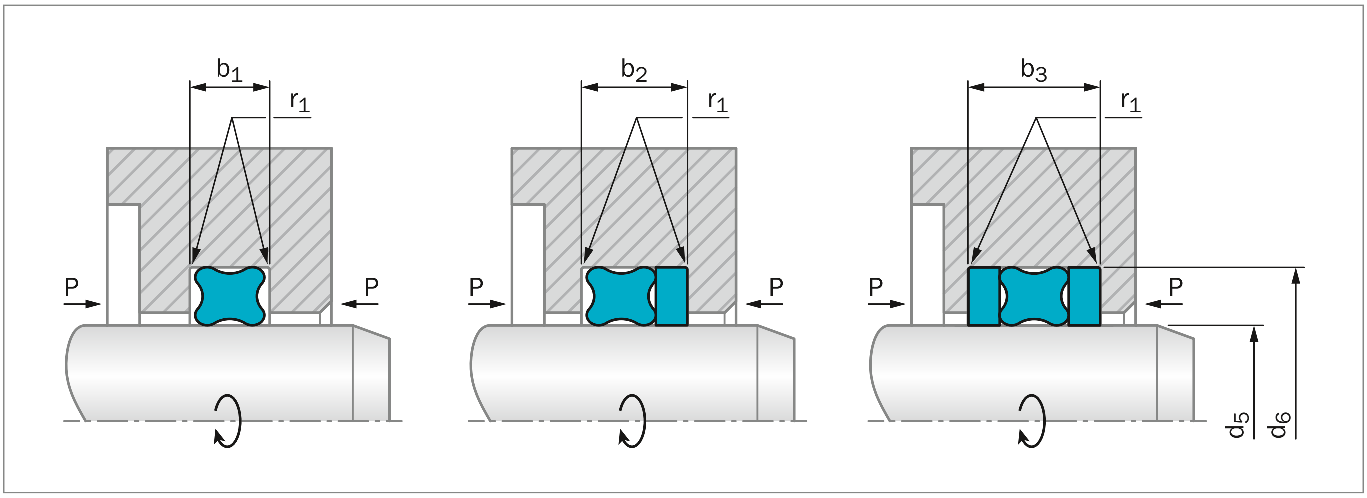

Figure 18: Installation Drawing

The following data regarding Back-up Rings and groove widths b_2 and b_3 are exemplary only. The use and the suitability of a Back-up Ring type, as well as the design of the appropriate groove widths b_2 and b_3, should be verified and adapted based on the application. For further information, please refer to the O-Ring and Back-up Rings Catalog.

Table 8: TSS Part No. / Installation Dimensions

Rod	Quad-Ring® Part No.	Dimensions	Back-up Ring, Uncut Part No.	Groove-Ø	Groove Width			Radius1)
d_5 f7				d_6 H8	b_1 +0.2	b_2 +0.2	b_3 +0.2	r_1
4.0	QRAR04008	4.47x1.78	BU16J0040	7.2	2.0	3.2	4.4	0.2
5.0	QRAR04009	5.28x1.78	BU16J0050	8.2	2.0	3.2	4.4	0.2
8.0	QRAR4012A	8.20x1.78	BU16J0080	11.2	2.0	3.2	4.4	0.2
10.0	QRAR4111A	10.20x2.62	BU24J0100	14.8	2.8	4.0	5.2	0.3
12.0	QRAR04112	12.37x2.62	BU24J0120	16.8	2.8	4.0	5.2	0.3
15.0	QRAR04114	15.54x2.62	BU24J0150	19.8	2.8	4.0	5.2	0.3
16.0	QRAR04115	17.12x2.62	BU24J0160	20.8	2.8	4.0	5.2	0.3
18.0	QRAR04116	18.72x2.62	BU24J0180	22.8	2.8	4.0	5.2	0.3
20.0	QRAR04211	20.22x3.53	BU33N0200	26.7	3.8	5.4	7.0	0.4
22.0	QRAR04213	23.39x3.53	BU33N0220	28.7	3.8	5.4	7.0	0.4
25.0	QRAR04215	26.57x3.53	BU33N0250	31.7	3.8	5.4	7.0	0.4
28.0	QRAR04217	29.74x3.53	BU33N0280	34.7	3.8	5.4	7.0	0.4
30.0	QRAR04218	31.34x3.53	BU33N0300	36.7	3.8	5.4	7.0	0.4
32.0	QRAR04219	32.92x3.53	BU33N0320	38.7	3.8	5.4	7.0	0.4
35.0	QRAR04221	36.09x3.53	BU33N0350	41.7	3.8	5.4	7.0	0.4
36.0	QRAR04222	37.69x3.53	BU33N0360	42.7	3.8	5.4	7.0	0.4
40.0	QRAR04326	40.64x5.33	BU49R0400	49.9	6.0	8.0	10.0	0.4
42.0	QRAR04327	43.82x5.33	BU49R0420	51.9	6.0	8.0	10.0	0.4

Rod	**Quad-Ring® Part No.**	**Dimensions**	**Back-up Ring, Uncut Part No.**	**Groove-Ø**	**Groove Width**			**Radius1)**
d_5 f7				**d_6** H8	**b_1** +0.2	**b_2** +0.2	**b_3** +0.2	**r_1**
45.0	QRAR04328	46.99x5.33	BU49R0450	54.9	6.0	8.0	10.0	0.4
48.0	QRAR04329	50.17x5.33	BU49R0480	57.9	6.0	8.0	10.0	0.4
48.0	QRAR04329	50.17x5.33	BU49R0480	57.9	6.0	8.0	10.0	0.4
50.0	QRAR04330	53.34x5.33	BU49R0500	59.9	6.0	8.0	10.0	0.4
52.0	QRAR04330	53.34x5.33	BU49R0550	61,9	6.0	8.0	10.0	0.4
55.0	QRAR04331	56.52x5.33	BU49R0550	64.9	6.0	8.0	10.0	0.4
56.0	QRAR04331	56.52x5.33	BU49R0560	65.0	6.0	8.0	10.0	0.4
60.0	QRAR04333	62.87x5.33	BU49R0600	69.9	6.0	8.0	10.0	0.4
63.0	QRAR04334	66.04x5.33	BU49R0630	72.9	6.0	8.0	10.0	0.4
65.0	QRAR04334	66.04x5.33	BU49R0650	74.9	6.0	8.0	10.0	0.4
70.0	QRAR04336	72.39x5.33	BU49R0700	79.9	6.0	8.0	10.0	0.4
75.0	QRAR04338	78.74x5.33	BU49R0750	84.9	6.0	8.0	10.0	0.4
80.0	QRAR04339	81.92x5.33	BU49R0800	89.9	6.0	8.0	10.0	0.4
85.0	QRAR04341	88.27x5.33	BU49R0850	94.9	6.0	8.0	10.0	0.4
90.0	QRAR04343	94.62x5.33	BU49R0900	99.9	6.0	8.0	10.0	0.4
95.0	QRAR04344	97.79x5.33	BU49R0950	104.9	6.0	8.0	10.0	0.4
100.0	QRAR04346	104.14x5.33	BU49R1000	109.9	6.0	8.0	10.0	0.4
105.0	QRAR04348	110.49x5.33	BU49R1050	114.9	6.0	8.0	10.0	0.4
110.0	QRAR04426	116.84x6.99	BU66T1100	123.3	7.7	10.2	12.7	0.6
115.0	QRAR04427	120.02x6.99	BU66T1150	128.3	7.7	10.2	12.7	0.6
120.0	QRAR04428	123.19x6.99	BU66T1200	133.3	7.7	10.2	12.7	0.6
125.0	QRAR04430	129.54x6.99	BU66T1250	138.3	7.7	10.2	12.7	0.6
130.0	QRAR04432	135.89x6.99	BU66T1300	143.3	7.7	10.2	12.7	0.6
140.0	QRAR04435	145.42x6.99	BU66T1400	153.3	7.7	10.2	12.7	0.6
150.0	QRAR04438	158.12x6.99	BU66T1500	163.3	7.7	10.2	12.7	0.6
160.0	QRAR04439	164.47x6.99	BU66T1600	173.3	7.7	10.2	12.7	0.6
180.0	QRAR04442	183.52x6.99	BU66T1800	193.3	7.7	10.2	12.7	0.6
200.0	QRAR04445	202.57x6.99	BU66T2000	213.3	7.7	10.2	12.7	0.6

1) If a Back-up Ring is used the recommended radius should always be r_1 = 0,25 ±0,2 mm.
Further sizes on request!
Materials for Quad-Ring® , see Table 1.

Different procedures for the friction reduction of the elastomer surface are available when using Quad-Ring® in a rotary application. Please refer to our Seal-Glide® brochure or contact your local Customer Solution Center.

■ General Quality Criteria

The cost-effective use of seals and bearings is highly influenced by the quality criteria applied in production. Seals and bearings from Trelleborg Sealing Solutions are continuously monitored according to strict quality standards from material acquisition through to delivery.

Certification of our production plants in accordance with international standards including ISO 9001, IATF 16949, EN/AS 9100, ISO 13485, ISO 14001, OHSAS 18001 or ISO 29001 and meets the specific requirements of the quality management system.
Our quality policy is consistently controlled by strict procedures and guidelines which are implemented within all strategic areas of the company.

All testing of materials and products is performed in accordance with accepted test standards and specifications, e.g. random sample testing in accordance with ISO 2859-1 AQL 1.0 general inspection level II, normal inspection.

Inspection specifications correspond to standards applicable to individual product groups (e.g. for O-Rings: ISO 3601).

Our sealing materials are produced free of chlorofluorinated hydrocarbons and carcinogenic elements.

■ Guidelines for the Storage of Polymer Products Based on ISO 2230

Many polymer products and components are stored for long periods of time before being put into service, so it is important they are stored in conditions that minimize unwanted changes in properties. Such changes may result from degradation, in which case they may include excessive hardening, softening, cracking, crazing and other surface effects. Other changes may be caused by deformation, contamination or mechanical damage.

Packaging

Unless otherwise specified in the appropriate product specification, rubber products should be enclosed in individual sealed envelopes. The packaging should be carried out in an atmosphere in which the relative humidity is less than 70%, or if polyurethanes are being packed, less than 65%. Where there is serious risk of ingress of moisture (e.g. rubber-metal-bonded parts), aluminium foil/paper/polyethylene laminate or other similar means of protection should be used to ensure protection from ingress of moisture.

Temperature

The preferred storage temperature for elastomer parts is +15 °C (+59 °F) and should not exceed +25 °C (+77 °F). The products should be stored away from direct sources of heat such as boilers, radiators and direct sunlight. If the storage temperature is below +15 °C (+59 °F), care should be exercised during handling of stored products, as they may have stiffened and have become susceptible to distortion if not handled carefully.

Humidity

The relative humidity should be such that, given the variations of temperature in storage, condensation does not occur. In all cases, the relative humidity of the atmosphere in storage should be less than 70%, or if polyurethanes are being stored, less than 65%.

Light

Rubber should be protected from light sources, in particular direct sunlight or intense light having a high ultra-violet content. It is advisable that any windows of storage rooms be covered with a red or orange coating or screen.

Radiation

Precautions should be taken to protect stored products from all sources of ionizing radiation likely to cause damage to the products.

Ozone

Ozone has a particularly harmful effect on rubber. Storage rooms should not contain any equipment that is capable of generating ozone, such as mercury vapor lamps or high-voltage electrical equipment giving rise to electric sparks or electrical discharges. Combustion gases and organic vapors should also be excluded, as they may give rise to ozone via photo-chemical processes. When equipment such as a fork-lift truck is used to handle large rubber products, care needs to be taken to ensure this equipment is not a source of pollution that may affect the rubber. Combustion gases should be considered separately. While they are responsible for generating ground-level ozone, they may also contain unburned fuel which, by condensing on rubber products, can cause additional deterioration.

Deformation

Rubber should be stored free from tension, compressive stresses or other causes of deformation. Where products are packaged in a strain-free condition, they should be stored in their original packaging. In case of doubt, the manufacturer's advice should be sought. It is advisable that rings of large internal diameter are formed into three equal loops so as to avoid creasing or twisting. It is not possible to achieve this condition by forming just two loops.

Contact with liquids and semi-liquid materials

Rubber should not be allowed to come into contact with liquid or semi-liquid materials (for example, petrol, greases, acids, disinfectants, cleaning fluids) or their vapors at any time during storage, unless these materials are by design an integral part of the product or the manufacturer's packaging. When rubber products are received coated with their operational media, they should be stored in this condition.

Contact with metals

Certain metals and their alloys (in particular, copper and manganese) are known to have harmful effects on some rubbers. Rubber should not be stored in contact with such metals except when bonded to them. They should be protected by wrapping in, or by separation with, a suitable material, e.g. paper or polyethylene.

Contact with dusting powder

Dusting powders should only be used for the packaging of rubber items in order to prevent adhesion. In such cases, the minimum quantity of powder to prevent adhesion should be used. Any powder used should be free from any constituent that would have a harmful effect on the rubber or the subsequent application of the rubber.

Contact between different products

Contact between products made from rubbers of different compositions should be avoided. This includes products of the same type but differing in color.

Rubber-to-metal bonded products

The metal part of rubber-to-metal bonded products should not come into contact with the rubber of other products. Preservative used on the metal should be of a type that it will not adversely affect the rubber or the bond to such an extent that it does not comply with the product specification.

Storage life

This is the maximum period of time that a rubber product, appropriately packaged, may be stored. After this time, the product is regarded as unserviceable for the purposes for which it was originally manufactured. The storage life of a rubber product is influenced by its shape and size as well as its composition. Thick products usually undergo slower changes through degradation than thinner ones.

Initial storage period

This is the maximum period, starting from the time of manufacture, for which a rubber product, appropriately packaged, may be stored under specified conditions before a sample needs to be inspected or re-tested.

Extension storage period

This is the period for which a rubber product, appropriately packaged, may be stored after the initial storage period, before further inspection and re-testing is necessary.

Assembly

These are products or components containing more than one element, one or more of which is made of rubber. Generally, it is not recommended to store elastomeric products in an assembled condition. If it is necessary to do so, the units should be checked more often. The inspection interval depends on the design and geometry of the components.

Inspection before extension storage

Before any items are to be stored for an extension period, representative samples of each type should be selected for inspection at the end of the appropriate initial storage period. Inspection should be in accordance with the relevant product specification.

Visual inspection

Inspect each of the items for the following:

1. Permanent distortions, such as creases or flats
2. Mechanical damage, such as cuts, tears, abraded areas or delaminated plies
3. Surface cracking when viewed under a microscope at x10 magnification
4. Changes in surface condition, such as hardening, softening or tackiness

Assessment at the end of the initial period

If, following the visual inspection procedure, the items are not satisfactory, they should not be stored for an extended period. If the items are satisfactory and are stored for an extended period, a record should be kept of the date initial storage began, as well as the date the extended storage period began. Items stored for an extended period should be inspected and tested at, or before, the expiry of the extension storage period before they are put into service or stored for a further extended period.

Table 9: Initial and Extension Storage Periods for unassembled Components

Material Group	Initial Storage Period	Extension Storage Period
AU, EU, NR, SBR	5 years	2 years
ACM, AEM, CR, ECO, HNBR, IIR, NBR	7 years	3 years
CSM, EPDM, FKM, VMQ, FVMQ	10 years	5 years
FFKM e.g. Isolast®	20 years	5 years
Zurcon®	10 years	5 years
PTFE	unlimited	

Note 1: If the storage temperature is over or under 25 °C (77 °F) this will influence the storage time. Storage at 10 °C (50 °F) higher will reduce the storage time by about 50%. Storage at 10 °C (50 °F) lower will increase the storage time by around 100%.

Note 2: In application areas such as aerospace, the storage periods can differ from this specification. These specific storage conditions have to be agreed between the supplier and the buyer.

Design Support & Engineering Tools

ONLINE TOOLS MAKE LIFE EASIER

Trelleborg Sealing Solutions has developed a number of online tools that make the working life of an engineer specifying seals easier. All these industry-leading tools are available free-of-charge from the Trelleborg Sealing Solutions website at www.tss.trelleborg.com. To use these advanced services all you have to do is register on the Members Area.

There is also a continually increasing range of innovative engineering apps available for smartphones, both for iOS and Android devices. Just search for "Trelleborg" in the App Store or GooglePlay to find the tools to optimize your daily productivity.

Units of measurement ● Metric ○ Inch

	Bore	
Tolerance class	Select	Select
Nominal Size	Enter value	

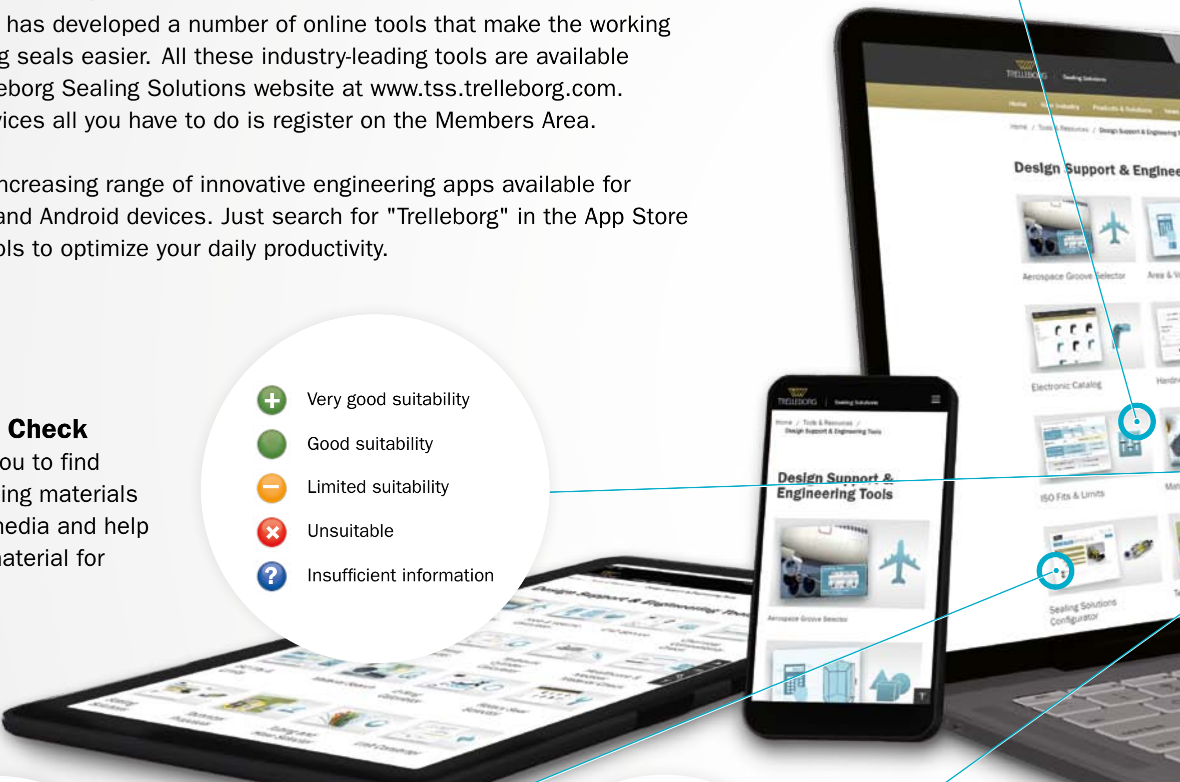
Design Support & Engineering Tools
Aerospace Groove Selector
Electronic Catalog
ISO Fits & Limits
Sealing Solutions Configurator
Design Support & Engineering Tools

Materials Search and Chemical Compatibility Check

These two programs allow you to find out the compatibility of sealing materials with hundreds of different media and help identify the most suitable material for your application.

- ⊕ Very good suitability
- ● Good suitability
- ⊖ Limited suitability
- ⊗ Unsuitable
- ? Insufficient information

Your Operating Parameters
Industry *
Agricultural machinery
Construction equipment
Choose your Equipment *
Backhoes
Backhoes <25 MPa
Backhoes <32 MPa
Adjusting cylinder
The adjusting cylinder is used fo

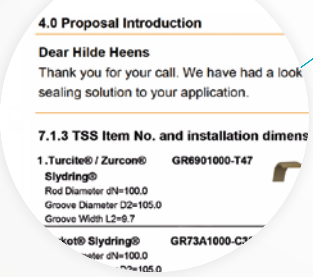

4.0 Proposal Introduction

Dear Hilde Heens

Thank you for your call. We have had a look

sealing solution to your application.

7.1.3 TSS Item No. and installation dimens

1.Turcite® / Zurcon® Slydring® GR6901000-T47

Rod Diameter dN=100.0

Groove Diameter D2=105.0

Groove Width L2=9.7

kot® Slydring® GR73A1000-C

eter dN=100.0

D2=105.0

Sealing Solutions Configurator

The Sealing Solutions Configurator is the first tool of its kind offered by any seal supplier. It allows engineers to identify a proven sealing solution for their specific application in just four easy steps.

Technical Proposals Online

Enhance your communication with Trelleborg Sealing Solutions with the Technical Proposals Online tool. Instantly access all your proposed solutions anywhere at any time and benefit from quicker dialog with our sealing specialists.

ISO Fits & Tolerances

Our Fits & Tolerances Calculator allows you to easily determine type of fits using the tolerances according to DIN ISO 286. In addition, upon entering the nominal diameter the tool calculates lower and upper limit deviations plus the maximum and minimum interferences dependent on the selected tolerance classes for bore and shaft.

Stepseal® 2K

Versatile CAD Service

The CAD download functionality provides thousands of drawings of a wide range of seals. It gives the option of 2- or 3-dimensional files in a range of formats to suit most commonly used CAD systems.

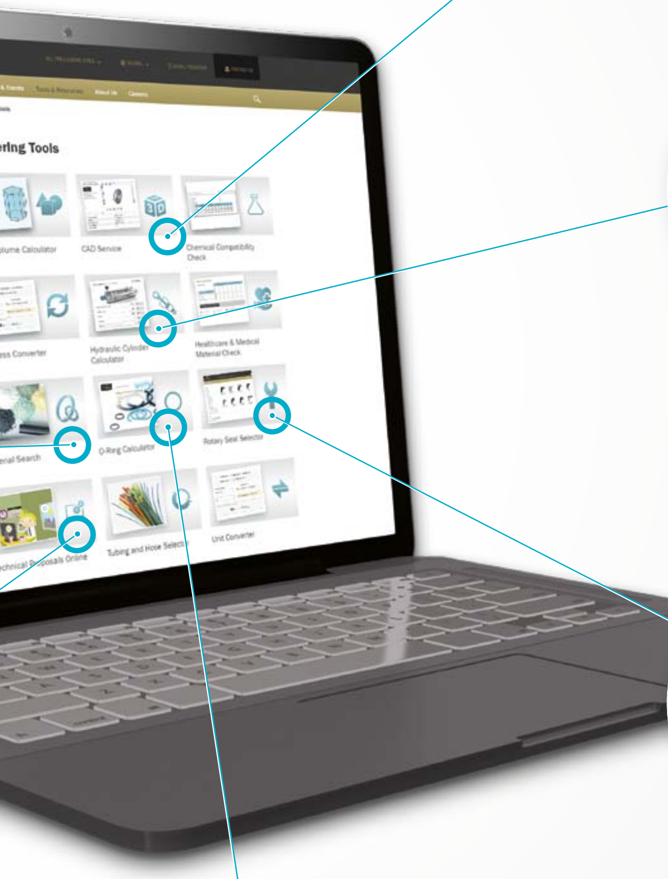
ering Tools
olume Calculator
CAD Service
Chemical Compatibility Check
ess Converter
Hydraulic Cylinder Calculator
Healthcare & Medical Material Check
erial Search
O-Ring Calculator
Rotary Seal Selector
chnical Proposals Online
Tubing and Hose Selector
Unit Converter

Metric ○ Inches
Piston / Bore Diameter
mm
Rod Diameter
mm
Stroke
mm
Pressure
bar
Flow
lpm
Bore Side
Rod Side

Hydraulic System Calculator

Hydraulic System Calculator helps you design a solution around the cylinder which may involve motor, pump, orifice and pipe calculations. The application is in compliance with ISO 3320, ISO 3321 & ISO 4393.

Seal Selector
01
02
03
Dynamic ID
Dynamic ID pressitised

Rotary Seal Selector

The Rotary Seal Selector allows you to search through the wide range of rotary seals and materials available based on application conditions and offers detailed information on installation and seal capabilities.

O-Ring Calculator

An industry-leading tool, the easy to use O-Ring calculator includes sizing capabilities, compression forces, design parameter recommendations and complete measurements. Results and comments may be printed, shared or filed as PDF.

Discover our design support and engineering tools at **www.trelleborg.com/seals**

Mobile Tools & Apps

We understand the needs of engineers on the go. Check out our latest mobile tools and apps, ranging from an O-Ring calculator to unit and hardness converters. Just search for "Trelleborg" in the App Store or Google Play to find the tools to optimize your daily productivity.

Discover our wide range of mobile tools and apps at **www.trelleborg.com/seals**

MANY MORE APPS available

Available on the **APP STORE**

Android App on **Google Play**

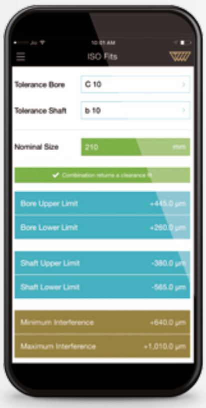
ISO Fits

Tolerance Bore: C 10

Tolerance Shaft: b 10

Nominal Size: 210 mm

✓ Combination returns a clearance fit

Bore Upper Limit	+445.0 µm
Bore Lower Limit	+260.0 µm
Shaft Upper Limit	-380.0 µm
Shaft Lower Limit	-565.0 µm
Minimum Interference	+640.0 µm
Maximum Interference	+1,010.0 µm

TRELLEBORG
Fluid Power

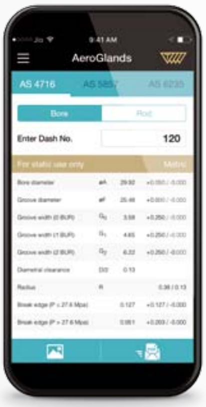
AeroGlands
AS 4716
AS 5857
AS 6235
Bore
Rod

Enter Dash No.: 120

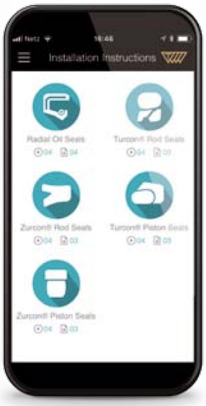
Installation Instructions
Radial Oil Seals
Turcon® Rod Seals
Zurcon® Rod Seals
Turcon® Piston Seals
Zurcon® Piston Seals

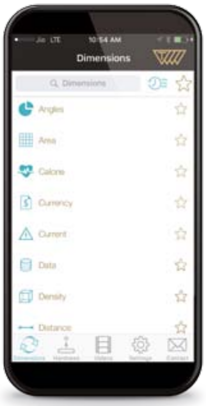
Dimensions
Angles
Area
Calorie
Currency
Current
Data
Density
Distance

ISO Fits & Tolerances

Simply enter the nominal diameter and select the tolerance classes for bore and shaft to find the complete ISO fits definition with all relevant values including type of fit, with handy graphs to illustrate the classes by bore and shaft.

Mechanical Engineering Calculator

An excellent tool offers over 244 formulas in 16 categories, with more being added every update. Categories include the fields of mathematics, physics and mechanical engineering.

Aerospace Groove Selector

This app covers two of the most important SAE aerospace groove standards for hydraulic systems, AS4716 Rev B and AS5857 Rev A, making it really easy to find the size of grooves and hardware needed.

Installation Instructions

Videos demonstrate the best practice methods for installing seals, providing all relevant documentation within the interface, guiding you to a successful installation of Radial Oil Seals and Turcon® and Zurcon® rod and piston seals.

Unit & Hardness Converter

By simply selecting the dimension and entering the value for conversion, the app offers a wide range of engineering and scientific units for each dimension.

in the groove

Our *in the groove* magazine provides news, technical and product information on seals, as well as insights into the markets they are used in. The magazine is also available in print and as an interactive PDF.

in the groove
The world of seals and service
O-Rings Online!
Moving into a Higher Gear
World's Biggest O-Ring
Aircraft Interior Sealing
Select a Seal
Roto Glyd Ring®
Roto VL Seal®
Roto VL Seal® F
Roto Glyd Ring® S
Reset

Rotary Seal Selector

Bring the popular Rotary Seal Selector webtool with you! Quickly search through Trelleborg Sealing Solutions rotary seals and materials for the optimum product for your application conditions while on the move.

Housing
d₁ Bore - Ø
ISO Size Code / Dash No.
d₂ O-Ring Cross Section - Ø
OR Dimensions (d₁ x d₂)
31.46 x 1.78 mm
TSS Part Number
ORAR00026

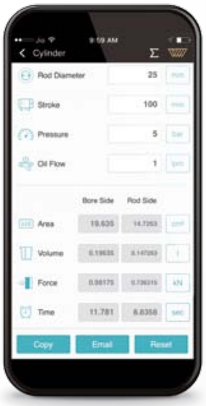
Cylinder
Rod Diameter
Stroke
Pressure
Oil Flow
Area
Volume
Force
Time
Copy
Email
Reset

Area & Volume
AREA
VOLUME
SHAPE
Sphere
SUB-SHAPE
Segment

Compatibility
Materials
Environments
Blood
Ethyl Alcohol
ETO/HCFC

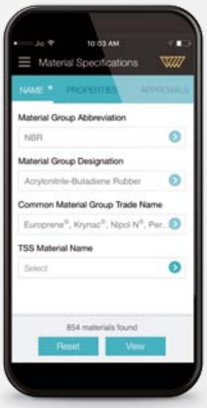
Material Specifications
Material Group Abbreviation
NBR
Material Group Designation
Acrylonitrile-Butadiene Rubber
Common Material Group Trade Name
TSS Material Name
854 materials found
Reset
View

O-Ring Selector

When a user enters installation specifications into the O-Ring Selector app, such as the bore or rod/shaft diameter, the app quickly calculates O-Ring and housing dimensions in both metric and inch.

Hydraulic System Calculator

Hydraulic System Calculator helps you design a solution around the cylinder which may involve motor, pump, orifice and pipe calculations.
The application is in compliance with ISO 3320, ISO 3321 & ISO 4393.

Area and Volume Calculator

Speeds up and simplifies calculating the area and volumes of more than 80 geometric shapes. The app supports both metric and imperial units and conveniently displays the formulas used. Fill your shape with solids or liquids, choosing from 1500 different materials, to calculate the weight.

Healthcare Materials

View a quick and easy overview of the compatibility of 34 materials with 35 chemical environments that are commonly encountered in the healthcare and medical industries. Select up to 20 materials and environments at once to produce a chart rating each material from "excellent" to "not recommended".

Sealing Materials Selector

Enter material specifications and required parameters, such as application temperature or hardness, to receive instant material proposals. The app features filters to limit searches based on chemical compatibility, institute approvals and product type and data sheets can be requested from within the interface.

Trelleborg is a world leader in engineered polymer solutions that seal, damp and protect critical applications in demanding environments. Its innovative solutions accelerate performance for customers in a sustainable way.

Trelleborg Sealing Solutions is a leading developer, manufacturer and supplier of precision seals, bearings and custom-molded polymer components. It focuses on meeting the most demanding needs of aerospace, automotive and general industrial customers with innovative solutions.

WWW.TRELLEBORG.COM/SEALS

facebook.com/TrelleborgSealingSolutions
twitter.com/TrelleborgSeals
youtube.com/TrelleborgSeals
linkedin.com/company/trelleborg-sealing-solutions

If you'd like to talk to Trelleborg Sealing Solutions, find your local contact at: www.trelleborg.com/seals/worldwide

Copyright © 2021 Trelleborg AB (publ). All rights reserved. Information and related materials are subject to change without notice.

Version no. 99000017GBGA0321